LNC-MILL Series

Programming Manual

2010/11 Ver：V04.00.004(4408210031)

Leading Numerical Controller

LNC Technology Co., Ltd.

Table of Content

1 G-Code Function Table 1

2 General M-Code Function Table 5

3 Command Syntax 6

G00 Rapid Positioning 6
G01 Linear Interpolation 8
G02, G03 Circular/Helical Interpolation CW/CCW 10
G04 Dwell 12
G09 Correct Positioning 13
G10 Data Input Setting 14
G15 Polar Coordinate Command Cancel 16
G16 Polar Coordinate Command 16
G17, G18, G19 Cutting Plane Setting 18
G20, G21 Conversion Between Metric System and British System 19
G22, G23 Tool Stored Stroke Check 20
G27 Return to Origin Check 22
G28 Return to the First Reference Point 24
G29 Return from the First Reference Point 26
G30 Auto Return to the 2nd, 3rd and 4th Reference Points 28
G31 Skip Signal Abort Block 30
G41, G42 Tool Radius Compensation 33
G43, G44, G49 Tool Length Compensation 36
G50, G51 Scaling Command 39
G52 Interval Coordinate System Setting 41
G53 Rapid Positioning of Machine Coordinate System 43
G54~G59 Manufacturing Coordinate System Selection 44
G61, G64 Exact Positioning Mode, General Cutting Mode 46
G65 Simple Call 47
G66 Macro Program Mode Call 50
G67 Macro Program Mode Call Cancel 52
G68, G69 Coordinate System Rotation 53

G73 Rapid Peck Drilling Cycle 56
G74 Left-Handed Screw Thread Tapping Cycle 65
G76 Fine Boring Cycle 74
G80 Fixed Canned Cycle Cutting Mode Cancel 83
G81 Drilling Cycle 84
G82 Drilling Cycle 92
G83 Peck Drilling Cycle 100
G84 Right-Handed Screw Thread Tapping Cycle 108
G85 Reaming Cycle 116
G86 Boring Cycle 124
G87 Back Boring/Cutting 132
G88 Boring Cycle 140
G89 Reaming Cycle 148
G90, G91 Absolute, Incremental Mode 156
G92 Coordinate Setting 157
G94, G95 Feed Per Minute, Feed Per Revolution 159
G98, G99 Retraction Point Setting 160
G100 Global variables Setting 161
G101~G105 Compound G-Code for Multi-hole Manufacturing 162
G101 Linear Mode Multi-hole Manufacturing Cycle 163
G102 Circular Mode of Multi-hole Manufacturing Cycle 170
G103 Arc Mode of Multi-hole Manufacturing Cycle 177
G104 Grid Mode of Multi-hole Manufacturing Cycle 184
G105 Promiscuous Mode of Multi-hole Manufacturing Cycle 192
G111~G114 Compound G-Code for Plane Manufacturing 199
G111 X-axis Two-Way Plane Manufacturing 200
G112 Two-way Plane Processing in Y-axis 202
G113 One-way Plane Manufacturing in X-axis 204
G114 Y One-way Plane Manufacturing in Y-axis 206
G121~G123 Compound G-Code for Side Manufacturing 208
G121 Circular Shape Side Manufacturing 209
G122 Rectangle Shape Side Manufacturing 210
G123 Track Shape Side Manufacturing 211
G131~G133 Compound G-Code for Pocket Manufacturing 212

G131 Circular Shape Pocket Manufacturing 213
G132 Rectangle Shape Fillet and Pocket Manufacturing 214
G133 Track Shape Pocket Manufacturing 215

4 Indication of Auxiliary Functions (M Code) 217

5 MACRO Program 219

5.1 Introduction of Macro Program 219
5.2 Macro Program Calling 221
5.3 Difference between Macro Program Calling (G65) and General Sub-Program Calling (M98) ... 226
5.4 MACRO Function Table 227
5.5 Variables 228
5.6 Mathematic Operation Command 240
5.7 Logic Operation Command 240
5.8 Compare Command 241
5.9 Flow Control Command（IF～GOTO） 241
5.10 Flow Control Command (WHILE～DO) 243
5.11 Function 246
5.12 Comment 247

1 G-Code Function Table

G Code	Function	Group
G00	Rapid Positioning	01
G01	Linear Interpolation	01
G02，G03	Circular/Helical Interpolation CW/CCW	01
G04	Dwell	00
G09	Correct Positioning	00
G10	Data Input Setting	00
G15	Polar Coordinate Command Cancel	17
G16	Polar Coordinate Command	17
G17	XY-Plane Selection	02
G18	ZX-Plane Selection	02
G19	YZ-Plane Selection	02
G20	English System Command Input	06
G21	Metric System Command Input	06
G22	Stored Stroke Check Function ON	00
G23	Stored Stroke Check Function OFF	00
G27	Return to Origin Check	00
G28	Return to the First Reference Point	00
G29	Return from the First Reference Point	00
G30	Auto Return to the 2nd, 3rd and 4th Reference Points	00
G31	Skip Signal Abort Block	00
G40	Tool Radius Compensation Cancel	07
G41	Tool Radius Compensation Left	07
G42	Tool Radius Compensation Right	07
G43	Tool Length Compensation Positive	08
G44	Tool Length Compensation Negative	08
G49	Tool Length Compensation Cancel	08
G50	Scaling Command Cancel	11
G51	Scaling Command	11
G52	Interval Coordinate System Setting	00

G Code	Function	Group
G53	Rapid Positioning of Machine Coordinate System	00
G54~G59	Manufacturing Coordinate System Selection	14
G61	Exact Positioning Mode	15
G64	General Cutting Mode	15
G65	Single Macro Call	12
G66	Macro Program Mode Call	12
G67	Macro Program Mode Call Cancel	12
G68	Coordinate System Rotation	16
G69	Coordinate System Rotation Cancel	16
G73	Rapid Peck Drilling Cycle	09
G74	Left-Handed Screw Thread Tapping Cycle	09
G76	Fine Boring Cycle	09
G80	Fixed Canned Cycle Cutting Mode Cancel	09
G81	Drilling Cycle/Spot Boring	09
G82	Drilling Cycle/Counter Boring	09
G83	Peck Drilling Cycle	09
G84	Right-Handed Screw Thread Tapping Cycle	09
G85	Reaming Cycle	09
G86	Boring Cycle	09
G87	Back Boring Cycle	09
G88	Boring Cycle (Manual Operation on the Bottom Point)	09
G89	Reaming Cycle	09
G90	Absolute Command	03
G91	Incrementalal Command	03
G92	Coordinate Setting	00
G94	Feed Per Minute	05
G95	Feed Per Revolution	05
G98	Canned Cycle Starting Point Return	10
G99	Canned Cycle R Point Return	10
G100	Global variables Setting	The following are all macros
G101	Linear Mode of Multi-hole Manufacturing Cycle	

G Code	Function	Group
G102	Circular Mode of Multi-hole Manufacturing Cycle	
G103	Arc Mode of Multi-hole Manufacturing Cycle	
G104	Grid Mode of Multi-hole Manufacturing Cycle	
G105	Promiscuous Mode of Multi-hole Manufacturing Cycle	
G111	Two-way Plane Processing in X-axis	
G112	Two-way Plane Processing in Y-axis	
G113	One-way Plane Processing in X-axis	
G114	One-way Plane Processing in Y-axis	
G121	Circular Shape Side Cutting	
G122	Rectangle Shape Side Cutting	
G123	Track Shape Side Cutting	
G131	Circular Shape Pocket Cutting	
G132	Rectangle Shape Pocket Cutting	
G133	Track Shape Pocket Cutting	

2 General M-Code Function Table

M Code	Function	Remark
M00	Program stop	CNC
M01	Optional stop	CNC
M02	End of program	CNC
M03	Spindle CW	
M04	Spindle CCW	
M05	Spindle stop	
M06	Auto tool change	
M08	Coolant ON	
M09	Coolant OFF	
M19	Spindle Orientation	
M20	Spindle Orientation Tuning	
M28	Rigid tapping Cancellation	
M29	Rigid tapping	
M30	Program rewind	CNC
M98	Calling of subprogram	CNC
M99	End of subprogram	CNC

3 Command Syntax

G00 Rapid Positioning

Command Format

G00 <axis><target site>;

Argument Instruction

- Axis

  Specify the name of axis being shifted, and it can be any combination of X, Y, Z, A, B, C or U, V, W. The only condition is that it must be consistent with the setting of current axis (the 4th axis is set by using the parameter #0122). The movement command for four-axis shift can be specified for each G00 single block.

- Target Site

  Coordinate of the target point, which can be an absolute value or incrementalal value in accordance with the status of G90 or G91.

Action Instruction

The function of the G00 Command can be used to enforce the tool rapid positioning to the specified coordinate.

When G00 is used, the movement speed can not be determined by the format of F__, but it is determined by the setting values of parameters #1000~1003, 1122~1123. The knob for fast feedrate adjustment now can adjust the speed percentage (F0, 25%, 50%, 100%).

For the G00 movement command, the movement between servo axes is independent, and the movement speed for each axis can be set by each parameter so that the operator should carefully concern this situation for the avoidance of the collision of both the tool and the workpiece. In most case, the tool axis (so-called Z-axis) should be drawn to the clearance height before executing the G00 Command. Moreover, the activation of G00 Command can be determined by the setting of the parameter #0041 as shown below. For more information about the determination of the G00 simultaneous movement feedrate, refer to the following table.

Program Sample

G90 G00 X20. Y10.;

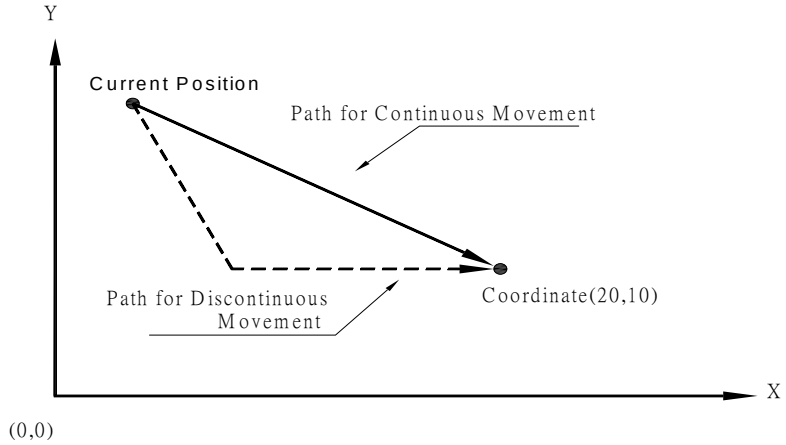

Determination of the G00 simultaneous movement feedrate

	In MEM, MDI modes, the G00 Command or action is the same as that of the G00 Command	G00, G53 Commands for the PMC axis function
Non-Dry-Run Mechanism	The movement speed of each axis should not exceed the G00 speed set for each axis (Note 1)	The movement speed of each axis should not exceed the G00 speed set for each axis
Dry Run Mechanism Parameter #0083 = 0	The movement speed of each axis should not exceed the JOG speed set for each axis (Note 2)	C23 is OFF : The movement speed of each axis should not exceed the JOG speed set for each axis; C23 is ON : The movement speed of each axis should not exceed the G00 speed set for each axis
Dry Run Mechanism Parameter #0083 = 1	The movement speed of each axis should not exceed the G00 speed set for each axis	The movement speed of each axis should not exceed the G00 speed set for each axis

Note 1: In this case, the override is based on the fast feedrate percentage.

Note 2: In this case, the override is based on the cutting feedrate percentage.

G01 Linear Interpolation

Command Format

G01 <axis><target site> F___;

Argument Instruction

- Axis

  Specify the name of axis for cutting and it can be any combination of X, Y, Z, A, B, C or U, V, W. The only condition is that it must be consistent with the setting of current axis (the 4th axis is set by using the parameter #0122).

- Target Site

  Coordinate of the target point, which can be an absolute value or incrementalal value in accordance with the status of G90 or G91.

- F__

  Feedrate (unit: mm/min or inch/min). The default value is acquired from the parameter #0149 if not specified.

Action Instruction

The function of the G01 Command can be used to enforce the Tool linear cutting moving to the position specified by the next Command from the current position with the F feedrate set.

When G01 is cutting, the actual feedrate can be adjusted by using the continuous feedrate adjustment knob at will (0%~150%). The highest cutting feedrate can be set by using the parameter #1004, and the actual cutting speed is the setting value of the parameter #1004 when the F value given by the maching program exceeds the setting value set by he parameter.

Illustration

G90 G01 X200. Y100. F200.;（Absolute Value）

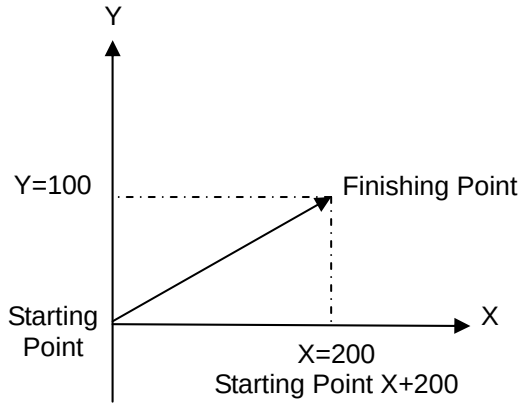

G91 G01 X200. Y100. F200.;（Incrementalal Value）

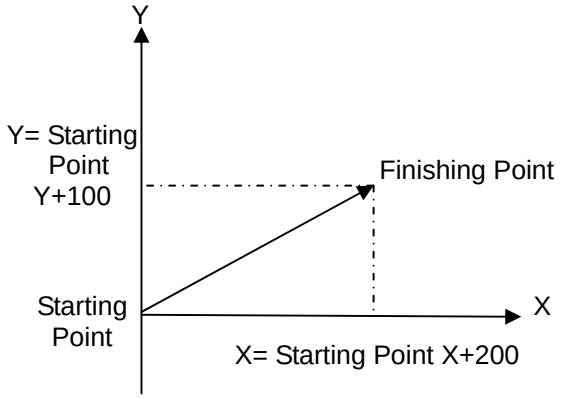

G02, G03 Circular/Helical Interpolation CW/CCW

Command Format

$$G17\begin{bmatrix}G02\\G03\end{bmatrix}X\_\_Y\_\_\begin{bmatrix}R\_\_\\I\_\_J\_\_\end{bmatrix}F\_\_;$$

$$G18\begin{bmatrix}G02\\G03\end{bmatrix}X\_\_Z\_\_\begin{bmatrix}R\_\_\\I\_\_K\_\_\end{bmatrix}F\_\_;$$

$$G19\begin{bmatrix}G02\\G03\end{bmatrix}Y\_\_Z\_\_\begin{bmatrix}R\_\_\\J\_\_K\_\_\end{bmatrix}F\_\_;$$

Argument Instruction

- X__, Y__, Z__

  Coordinate of the target point, which can be an absolute value or incrementalal value based on the status of G90 or G91.

- I__

  The starting point away from the center point at the X axis which is an incrementalal value when viewing from the start point to the center point.

- J__

  The starting point away from the center point at the Y axis which is an incrementalal value when viewing from the start point to the center point.

- K__

  The starting point away from the center point at the Z axis which is an incrementalal value when viewing from the start point to the center point.

- F__

  Feedrate (mm/min or inch/min)

- R__

  Radius of Circular-arc

Action Instruction

G02 : Circular/Helical Interpolation Clockwise (CW).

G03 : Circular/Helical Interpolation Counterclockwise (CCW).

G02 and G03 are Commands for Circular/Helical Interpolation. Because the workpiece is 3D, the Circular/Helical Interpolation direction on the different plane is shown in the following diagram. The start-up default plane can be set by using the parameter #0145。The processing command can use R to replace I, J, K directly, wherein R is the radius of Circular/Helical. If R, I and J are written in the program, the system will take the one specified by R as a base.

For G02 and G03 Commands, the system will check and determine whether the distance from the starting point of Circular/Helical to the center point is the same as the distance from the end point of Circular/Helical to the center point (each one of them must be equal to the radius of the Circular/Helical）. If the error between them exceeds 5 μm, the system alarm will be enabled【When INT 3132 uses G02/G03, the end coordinate is not on the Circular/Helical】

Illustration

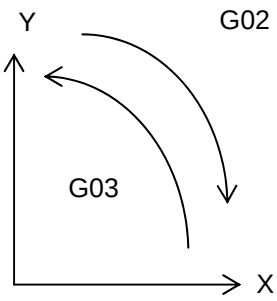

Circular/Helical in
G17_X－Y Plane

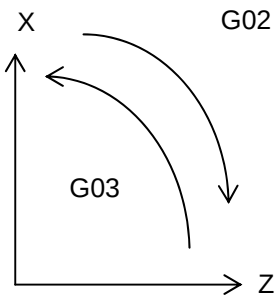

Circular/Helical in
G18_Z－X Plane

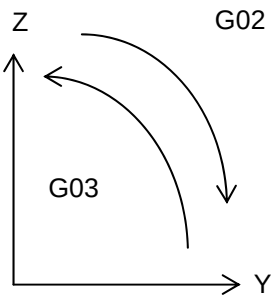

Circular/Helical in
G19_Y－Z Plane

G04 Dwell

Command Format

```
G04 X___;
G04 P___;
```

Argument Instruction

- X__

  Setup the time-out in sec. Setting range: 0.001~99999.999.

- P__

  Setup the time-out in ms, and the decimal timess are not allowed to be entered as data. Setting range: 1~99999999.

Action Instruction

Action of Dwell – The time-out can be set after G04, and the next section will be continued and executed after the time-out is up.

Program Sample

G04 X100.;---------- Stop time is 100 sec.

G04 P100; ---------- Stop time is 0.1 sec.

G04; ----------Similar to the actual stop (G09)

G09 Correct Positioning

Command Format

$$G09\begin{bmatrix} G01\_\_ \\ G02\_\_ \\ G03\_\_ \end{bmatrix};$$

Argument Instruction

G09 is a command that can accommodate to put off the tool. In the case of G09, each time the system executes each positioning command, the confirmation of positioning is needed to be taken, and the next block will be executed after confirming that the conditions of the positioning meet the settings. If the cutting positioning occurs between blocks when operating, the discontinuous situation will exist because of the precision demand of the positioning point, so the speed will be sacrificed. This method will lead to the higher precision, and the positioning precision can be set by using the parameters #0006~0009. The function of G09 can only be functioned in single block pertaining to G09, and then go back to the original status.

Program Sample

G91 G09 G01 Y100. F200.; ---------- （1）

G01 X100.;---------- （2）

Sample Diagram

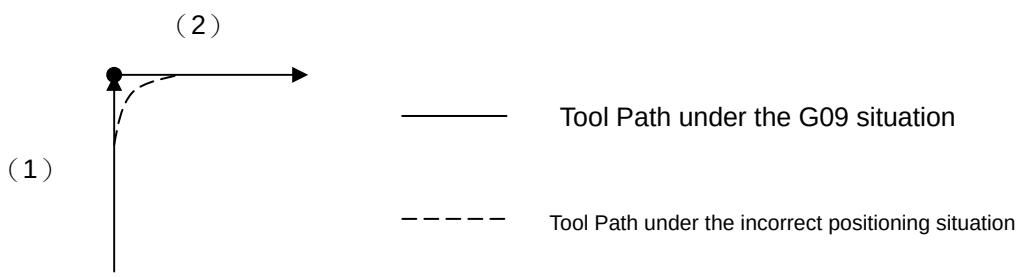

G10 Data Input Setting

Command Format 1

G10 P 1~30 R__ Z__;

Command Format 2

G10 P 154~159 <axis><target site>;

Argument Instruction

Function 1 : Set up the tool compensation value.

- P__

  Tool compensation value. Setting range: 1~30.

- R__

  Tool radius compensation value.

- Z___

  Tool length compensation value.

Function 2 : Setup the machine coordinate of the origin in the G54~G59 coordinate system.

- P__

  Coordinate system. Setting range:154~159 which are corresponding to G54~G59.

- Axis

  Specify the name of axis being set. It can be any combination of X, Y, Z, A, B, C or U, V, W. The only condition is that it must be consistent with the setting of current axis (the 4th axis is set by using the parameter #0122).

- Target Site

  Machine coordinate of the target point.

Action Instruction

For the compensation of tool and G54~G59 coordinate system, MDI input will be taken in most case, but the G10 command can be set in maching program, and it must be set before using these tool compensation value or G54~G59 coordinate system so that the setting values can be activated in the maching program later.

Program Sample

G10P1R6.Z10;Set the radius offset value of the first Tool to 6, and the offset value of the length to 10, respectively.

G10P154X50;Set the mechane coordinate of the origin of X axis in G54 coordinate system to 50.

G15 Polar Coordinate Command Cancel

G16 Polar Coordinate Command

Command Format

```
G17 G16 X___ Y___;
G18 G16 Z___ X___;
G19 G16 Y___ Z___;
```

Argument Instruction

- X__ Y__

  In G17 plane, X__ specifies the radius of the polar coordinate, while Y__ specifies the angle of the polar coordinate.

- Z__ X__

  In G18 plane, Z__ specifies the radius of the polar coordinate, while X__ specifies the angle of the polar coordinate.

- Y__ Z__

  In G19 plane, Y__ specifies the radius of the polar coordinate, while Z__ specifies the angle of the polar coordinate.

  The angle can be executed by using the incrementalal or absolute command.

Action Instruction

As shown below, the target point of cutting path can be specified by using G16 in polar coordinate system.

Illustration

G17 G90（Absolute）

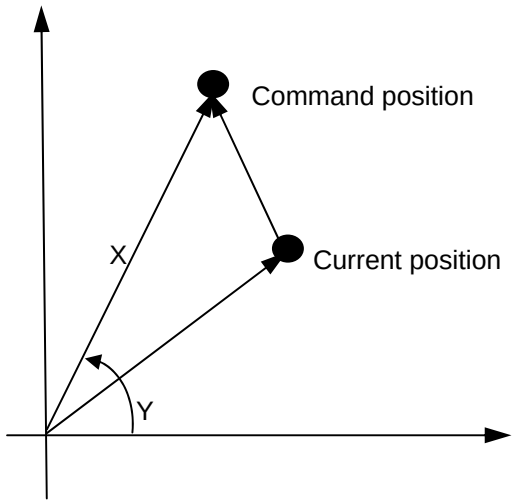

X: radius　Y: angle

G17 G91（Incremental）

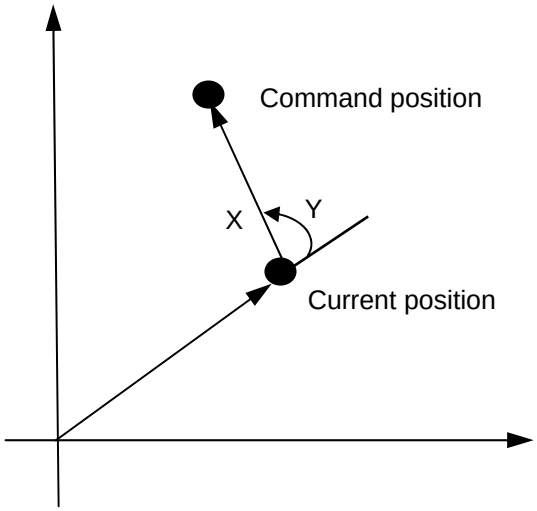

X: radius　Y: angle

G17, G18, G19 Cutting Plane Setting

Command Format

G17;（XY Plane）
G18;（ZX Plane）
G19;（YZ Plane）

Argument Instruction

When using the Circular/Helical Command or the tool radius compensation command, the cutting plane must be set at first in order to ensure the correctness of the system computing.

The start-up default processing plane can be set by using parameter #0145.

G20, G21 Conversion Between Metric System and British System

Command Format

```
G20;
G21;
```

Argument Instruction

- G20

  British system unit setting (inch unit), and the minimum value is 0.0001 inch

- G21

  Metric system unit setting (mm unit), and the minimum value is 0.001 mm

This command should be independently used, and should not coexist with other commands in the same single block. Meanwhile, this command must be set in the header of the program, i.e. before setting the coordinate system.

The following items must be considered when converting unit:

（1）The coordinate of workpiece should be reverted to basic system.

（2）The tool offset should be cancelled.

（3）The related parameters used in the system must be modified at the same time, and compliant to the unit set.

G22, G23 Tool Stored Stroke Check

Command Format

```
G22 X___ Y___ Z___ I___ J___ K___;
G23;
```

Argument Instruction

- X___ Y___ Z___and I___ J___ K___
  Designate the range of stroke as the machine coordinate. Please refer to the reference diagram.

Action Instruction

G23 is used to cancel the tool-stored stroke check.

G22 should be executed after manually zero point return; The tool should not enter the prohibited stroke zone specified by G22 after the setting; otherwise the system alarm will be triggered :

【MOT 9009 X-axis exceeds the positive stroke limit of G22】
【MOT 9010 X-axis exceeds the negative stroke limit of G22】
【MOT 9011 Y-axis exceeds the positive stroke limit of G22】
【MOT 9012 Y-axis exceeds the negative stroke limit of G22】
【MOT 9013 Z-axis exceeds the positive stroke limit of G22】
【MOT 9014 Z-axis exceeds the negative stroke limit of G22】

In the manual mode, the alarm can be disabled if user moves the servo axis in the reverse direction; In the auto mode, the system alarm can be triggered in addition to the alarm mentioned above【MOT 4058 exceeds the software stroke limit】, and the function of NC is disabled, so user needs to press the RESET key to cease the alarm status.

The prohibited zone specified by G22 can be set by system parameter #0071 to determine whether it's an internal prohibited zone or an external prohibited zone that.

Illustration

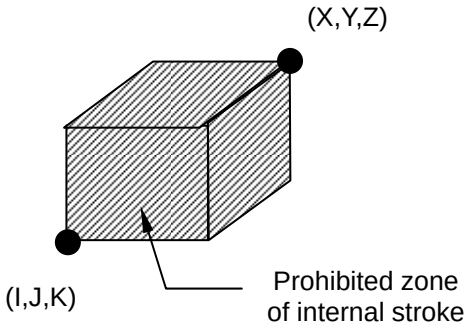

Parameter #0071=1

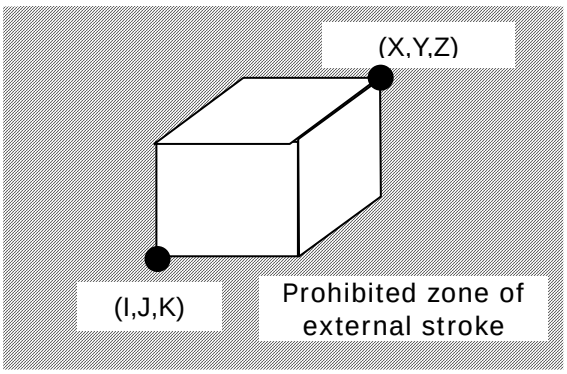

Parameter #0071=0

G27 Return to Origin Check

Command Format

G27 <axis><target site>;

Argument Instruction

- Axis
  Specify the name of axis being reverted to the origin. It can be any combination of X, Y, Z, A, B, C or U, V, W. The only condition is that it must be consistent with the setting of current axis (the fourth axis is set by using the parameter #0122). On the six-axes model M600, parameters #0288 & #0289 are used to control the 5th & 6th axes.
- Target Site
  Coordinate of the target point, which can be an absolute value or incrementalal value in accordance with the status of G90 or G91.

Action Instruction

When the program completes an operation cycle and reaches the finishing point or goes back to starting point, G27 can be used to execute the check of “Return to origin” in order to ensure the correctness of current actual location. After the execution of the specified stroke is completed, G27 command will check the current position and determine whether it reaches the mechanical origin (First reference point); if it stops at the origin after execution, the indicator light for origin point will alight, and next single block will be run; if it does not stop at the origin, the system alarm will be triggered【MOT 4046 “Return to origin” failed】.

When the argument X___ is specified, the Return and check could be prosecuted at the X-axis; if not specified, the Return and check should not be prosecuted at the X-axis, and the truth can be similarly applied to other axes.

We suggest that all Tool Compensations should be canceled before executing G27 for the avoidance of misjudgment.

Illustration

G90 G00 X100. Y50.;

G00 X60. Y100.;

G91 G27 X-60. Y-100.;（Correctness）

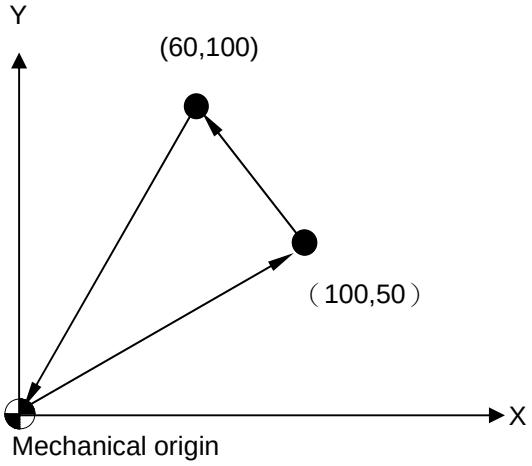

G90 G00 X100. Y50.;

G00 X60. Y100.;

G91 G27 X-10. Y-50.;（Alarm）

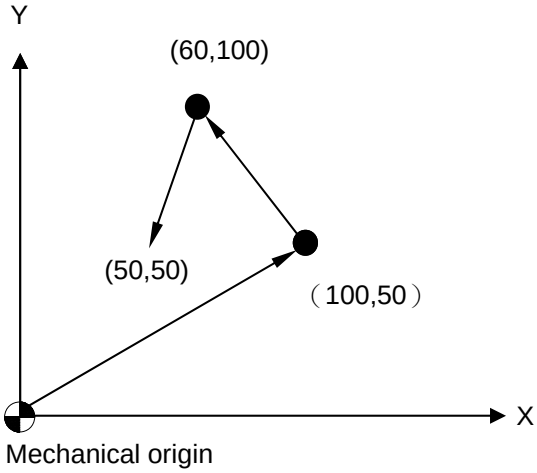

G28 Return to the First Reference Point

Command Format

G28 <axis><target site>;

Argument Instruction

- Axis

  Specify the name of axis being reverted to the first reference point. It can be any combination of X, Y, Z, A, B, C or U, V, W. The only condition is that it must be consistent with the setting of current axis (the 4th axis is set by using the parameter #0122). On the six-axes model M600, parameters #0288 & #0289 are used to control the 5th & 6th axes.

- Center point Position

  Coordinate of the center point, which can be an absolute value or incrementalal value in accordance with the status of G90 or G91.

Action Instruction

The system will preserve the coordinate of the center point specified by G28 for the further use of G29.

In maching program, the tool can be reverted to the first reference point (machine origin) after G28 Command is used to control the tool to pass through the center point set previously. Before executing G28, the “manual return to origin” procedure must be prosecuted first, otherwise the system alarm will be triggered 【“return to origin” is not yet prosecuted after the MOT 4018 is enabled】。

When the argument X___ is not specified, return to the first reference point will not be prosecuted at the X-axis; and on other axes as well. If no argument of any axis is specified, return to the first reference point will be prosecuted at all axes.

Note that the preciously specified tool length compensation value will be cancelled automatically after the execution of G28.

Illustration

G90 G28 X100. Y80.;

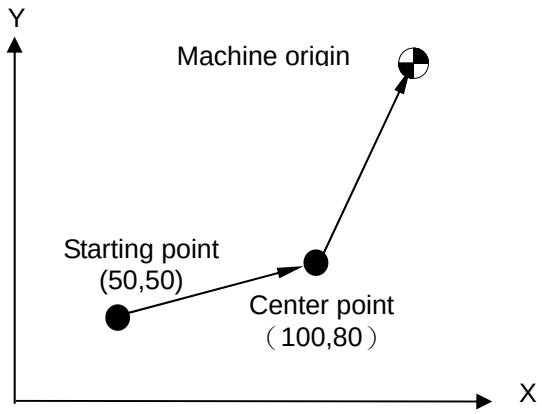

G91 G28 X0. Y0.;（No center point）

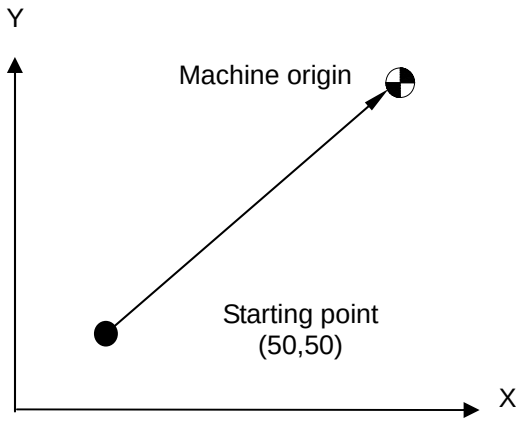

G29 Return from the First Reference Point

Command Format

G29 <axis><target site>;

Argument Instruction

- Axis

  Specify the name of axis being reverted to the first reference point. It can be any combination of X, Y, Z, A, B, C or U, V, W. The only condition is that it must be consistent with the setting of current axis (the 4th axis is set by using the parameter #0122). On the six-axes model M600, parameters #0288 & #0289 are used to control the 5th & 6th axes.

- Target Site

  Coordinate of the target point, which can be an absolute value or incrementalal value in accordance with the status of G90 or G91.

Action Instruction

The G29 Command is only used after G28. The tool will stop at the first reference point after G28 is executed; and now G29 can be used to control that the tool to move to the target position after it passes through the center point specified by G28 from the first reference point.

Illustration

G90 G28 X100. Y80.;（A→B→R）

G29 X150. Y60.;　　（R→B→C）

G90 G28 X100. Y80.; ----------（A→B→R）

G29 X150. Y60.;----------（R→B→C）

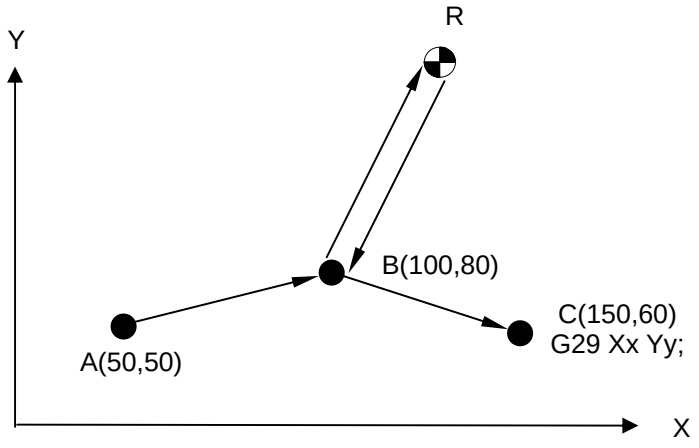
R
Y
B(100,80)
C(150,60)
G29 Xx Yy;
A(50,50)
X

G30 Auto Return to the 2nd, 3rd and 4th Reference Points

Command Format

$$G30\ \ P\begin{bmatrix}2\\3\\4\end{bmatrix} < \text{Axis} >< \text{Center point Location} >;$$

Argument Instruction

- P__
  Specify the reference point. Setting range: 2~4, corresponding to the 2nd~4th reference points.
- Axis
  Specify the name of axis being reverted to the reference points. It can be any combination of X, Y, Z, A, B, C or U, V, W. The only condition is that it must be consistent with the setting of current axis (the 4th axis is set by using the parameter #0122). On the six-axes model M600, parameters #0288 & #0289 are used to control the 5th & 6th axes.
- Center point Location
  Coordinate of the center point can be an absolute value or incrementalal value in accordance with the status of G90 or G91.

Action Instruction

This command is used to return to 2nd, 3rd, 4th reference points, and the tool will revert to 2nd, 3rd, 4th reference points through the center point from the current position.

The offset of 2nd reference point and the machine origin can be set by using parameters #1022~1025; the offset of 3rd reference point and the machine origin can be set by using parameters #1026~1029; and the offset of 4th reference point and the machine origin can be set by using parameters #1030~1033.

Before executing G30, the “manually return to origin” procedure must be executed at first, otherwise the system alarm will be triggered【MOT 4018: Returning to origin is not yet executed after boot】.

When the argument X___ is not specified, return to origin will not be executed on X-axis; so will be it on other axes as well. If no argument of any axis is specified, the “Return to reference point” procedure will be executed at all axes.

Note that the previously specified Tool Compensation value will be cancelled automatically after G30 is executed.

Illustration

G90 G30 P2 X100. Y80.;

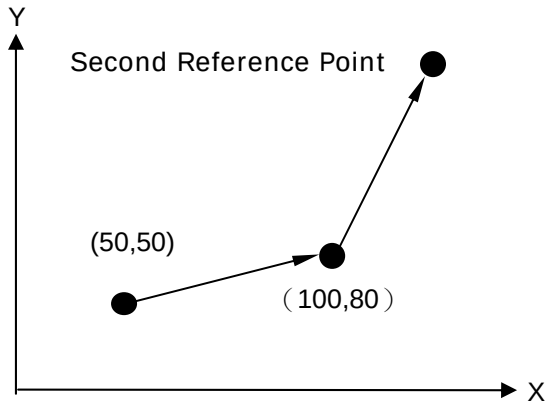

G91 G30 P2 X0. Y0.;（NO center point）

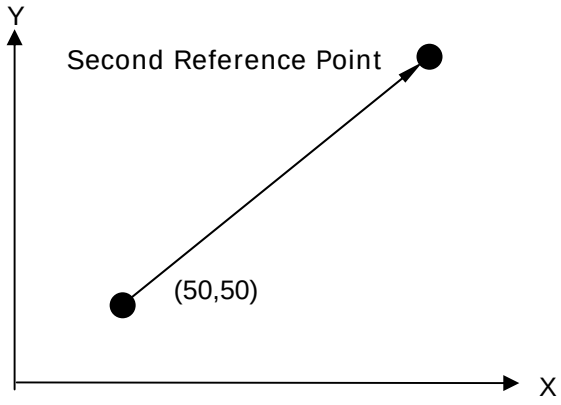

G31 Skip Signal Abort Block

Command Format

G31 <axis><target site> F___;

Argument Instruction

- Axis

  Specify the name of axis being set. It can be any combination of X, Y, Z, A, B, C or U, V, W. The only condition is that it must be consistent with the setting of current axis (the 4th axis is set by using the parameter #0122). On the six-axes model M600, parameters #0288 & #0289 are used to control the 5th & 6th axes.

- Target Site

  Coordinate of the target point, which can be an absolute value or incrementalal value in accordance with the status of G90 or G91.

- F__

  Feedrate, which is only effective in this single block. If is not set, the setting value of parameter #1042 is used for the feedrate of this single block.

Action Instruction

The function of this command is the same as G01, and if the Skip signal is triggered during execution, this single block will be terminated immediately, and the next single block will be run.

The absolute coordinate will be set in variables $260~$263 of the macro program when G31 Skip signal is triggered (X-axis, Y-axis, Z-axis and the 4th axis in order), while the machine coordinate will be set in system variables $270~$273 of the macro program (X-axis, Y-axis, Z-axis and 4th axis in order). Before G31 Skip signal is triggered, system variables $260~$263 (absolute coordinate), $270~$273 (machine coordinate) of macro program are the coordinate of target point of G31 command.

Illustration

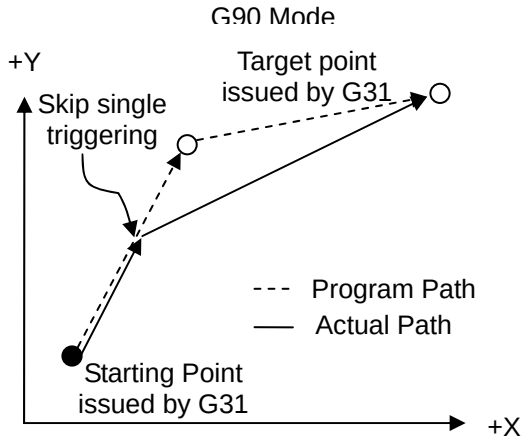

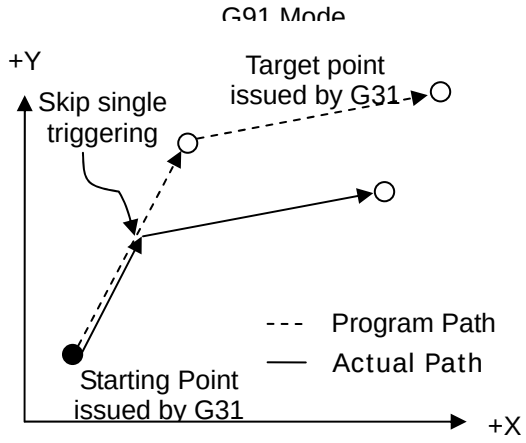

Relevant parameter

1. Parameter #0073 : Operation Type, whether to decelerate or stop after receiving G31 Skip signal

2. Parameter #0176 : Operation Type, G31 Skip signal is for Local Input contact.

3. Parameter #0177 : Operation Type, G31 Skip signal can be normally close (NC) or normally open (NO).

4. Parameter #1042 : Servo Type, the default feedrate of G31 block. unit: um/min.

G41, G42 Tool Radius Compensation

Command Format

$$\begin{bmatrix} G17 \\ G18 \\ G19 \end{bmatrix} \begin{bmatrix} G41 \\ G42 \end{bmatrix} D\_\_;$$

G40;

Argument Instruction

- G40

  Tool radius compensation cancel.

- G41

  Tool radius compensation left.

- G42

  Tool radius compensation right.

- D__

  Tool Compensation times. Setting range: 1~30

Action Instruction

The single block for the start and the cancellation of tool Compensation must be a linear command (G00 or G01), circular/helical command (G02 or G03) is not allowed.

The type of Tool Compensation could be Type A and Type B, which could be set by parameter #0131.

Illustration

G41 : The tool has an offset of an amount of the radius to the left when facing to the direction of tool movement.

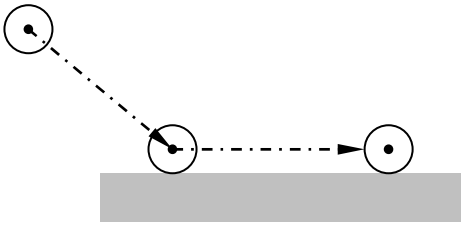

G42 : The tool has an offset of an amount of the radius to the right when facing to the direction of the tool movement.

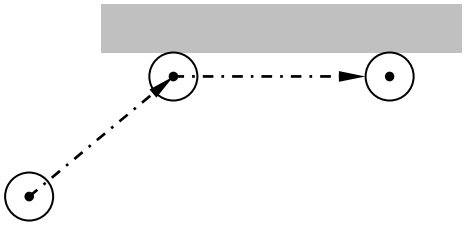

TYPE A	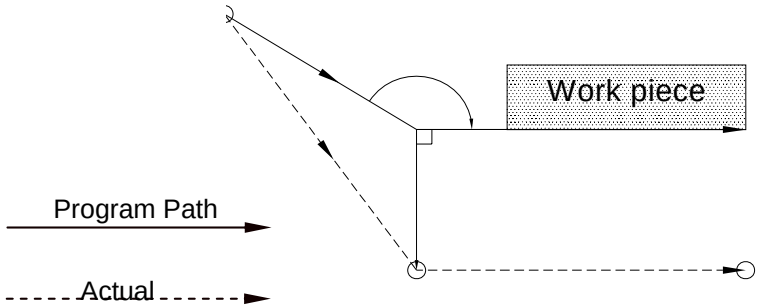
	toWHILE [….] DO 1; ol path 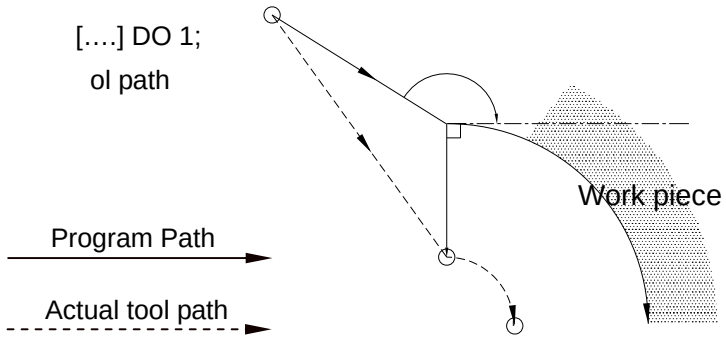
TYPE B	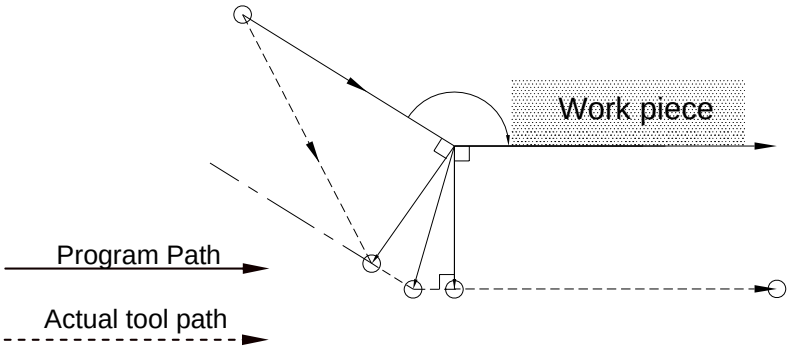
	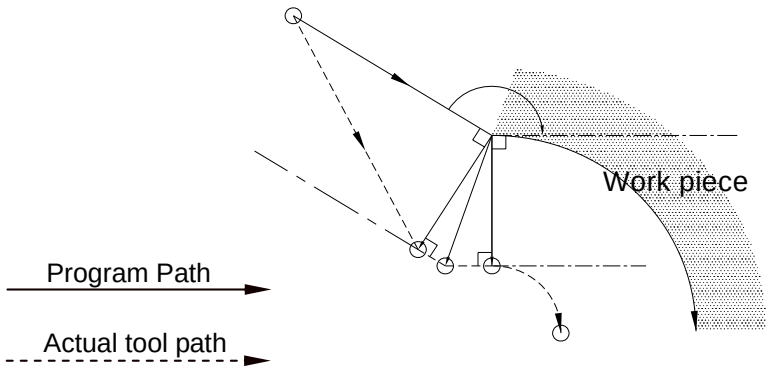

G43, G44, G49 Tool Length Compensation

Command Format

```
G43H__;
G44H__;
G49;
```

Argument Instruction

- G43

  A command for Tool Compensation in positive direction. If the compensation value is positive, the tool axis will be moved in the positive direction.

- G44

  A command for Tool Compensation in negative direction. If the compensation value is positive, the tool axis will be moved in the negative direction.

- G49

  Tool length compensation cancel.

- H__

  Tool length compensation. Setting range: 1~99, and the compensation value for H0 is always set to 0.

Program Sample

H1 : 20.0mm, H2 : 30.0mm

Program Command	Absolute Coordinate	Machine Coordinate
…		
G00Z0.;	0.	0.
G43H1;	-20.	0.
Z50.;	50.	70.
G43H2;	40.	70.
Z50.;	50.	80.
G49;	80.	80.
…		

H1 : 20.0mm, H2 : 30.0mm

Program Command	Absolute Coordinate	Machine Coordinate
…		
G00Z0.;	0.	0.
G44H1;	20.	0.
Z50.;	50.	30.
G44H2;	60.	30.
Z50.;	50.	20.
G49;	20.	20.
…		

Note:

1. **G53, G28 and G30 in Tool Compensation Process**

   When processing Tool Compensation, G53, G28 and G30 Commands make NC to cancel Tool Compensation value automatically, and convert to the status of G49.

H1 : 20.0mm

Program Command	Absolute Coordinate	Machine Coordinate
…		
G00Z0.;	0.	0.
G43H1;	-20.	0.
G00Z50.;	50.	70.
G91G28Z0.;	0.	0.
G00Z50.;	50.	50.
…		

2. **M30, M02 in Tool Compensation Process**

   When processing Tool Compensation, M30 and M02 End of Program Commands make NC to cancel Tool Compensation value automatically, and convert to the status of G49.

3. **RESET in the Tool Compensation Process**

   When processing Tool Compensation, RESET signal will make NC to cancel the Tool Compensation value automatically, and convert to the status of G49.

G50, G51 Scaling Command

Command Format

$$G51\,X\_\_\ Y\_\_\ Z\_\_\begin{bmatrix} P\_\_ \\ I\_\_\ J\_\_\ K\_\_ \end{bmatrix};$$

$$G50;$$

Argument Instruction

- G51
  Scaling Enable.
- G50
  Scaling Cancel.
- X__ Y__ Z__
  Coordinates of the scaling center point.
- P__
  Multiple, no decimal timess, and the unit is the multiple of 0.001. Setting range: 1~99999 (corresponding to the multiple of 0.001～99.999, and the multiple is 1 when set to 1000). Same condition as on each axis.
- I__ J__ K__
  Multiple of scaling for each axis, which can be set by using parameters #1092~1094.

Action Instruction

The scaling processing uses P___or I___ J___ K___ which can be determined by parameter #0143. The activation of scaling function for each axis can be set by parameters #0136~0138.

Illustration

G90 G51 X40. Y30. P2000.

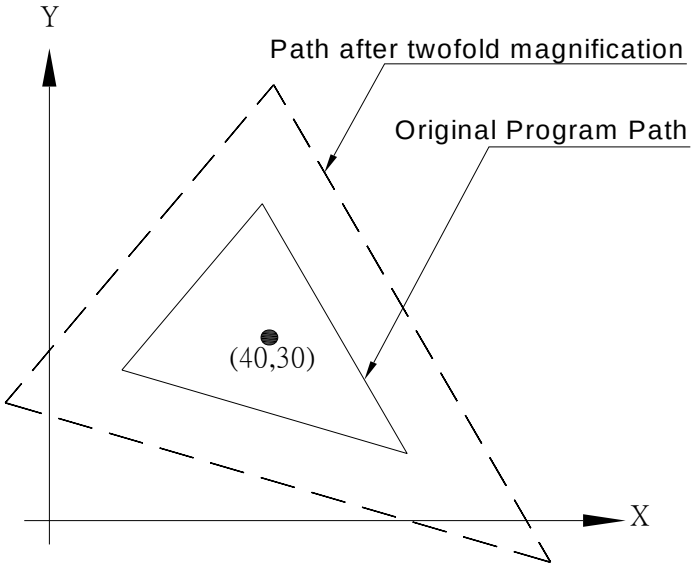

G52 Interval Coordinate System Setting

Command Format

G52 <axis><origin of interval coordinate system

Argument Instruction

- Axis

  Specify the origin of interval coordinate system for the working coordinate system (G54~G59) of an axis. It can be any combination of X, Y, Z, A, B, C or U, V, W. The only condition is that it must be consistent with the setting of current axis (the 4th axis is set by parameter #0122). On the six-axes model M600, parameters #0288 & #0289 are used to control the 5th & 6th axes.

Action Instruction

An interval coordinate system can be set in all manufacturing coordinate systems (G54~G59) by using G52 Command. Sometimes this makes program coding more convenient. After G52 is set, movement commands are aiming towards the interval coordinate system set by G52 under absolute mode (G90).

Illustration

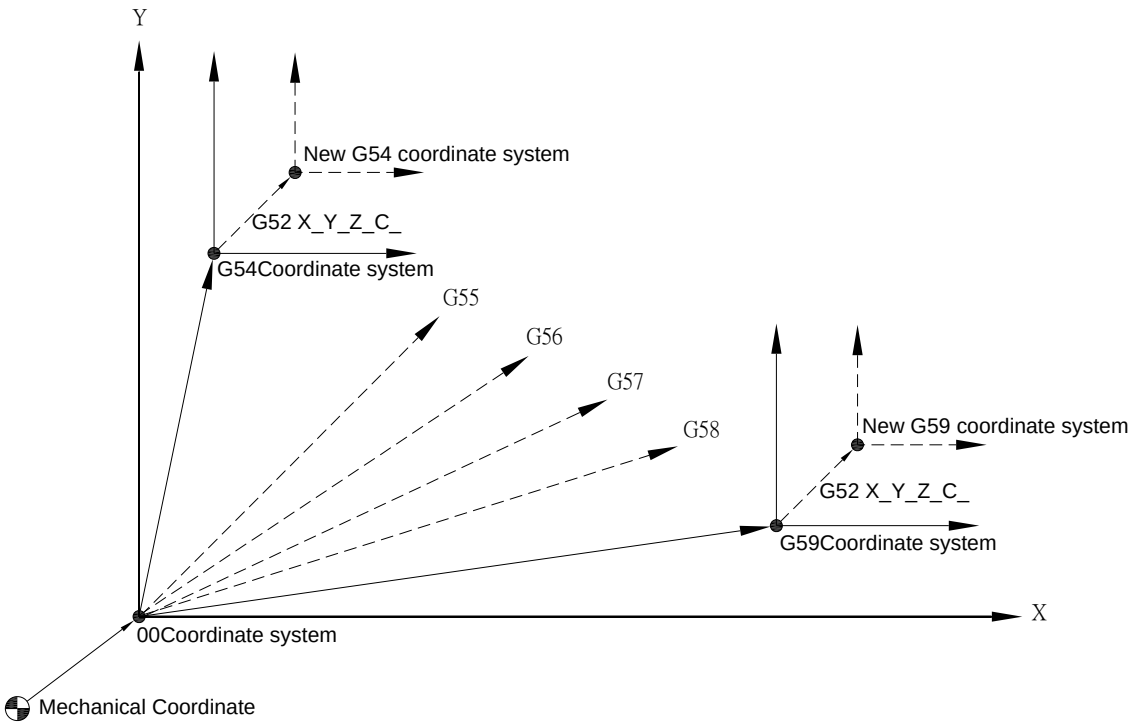

Program Sample

G90 G54 G00 X10. Y10.;

G52 X30. Y20.;

G00 X20. Y20.; ---------- （A→B）

G56 G00 X50. Y10.; ---------- （B→C）

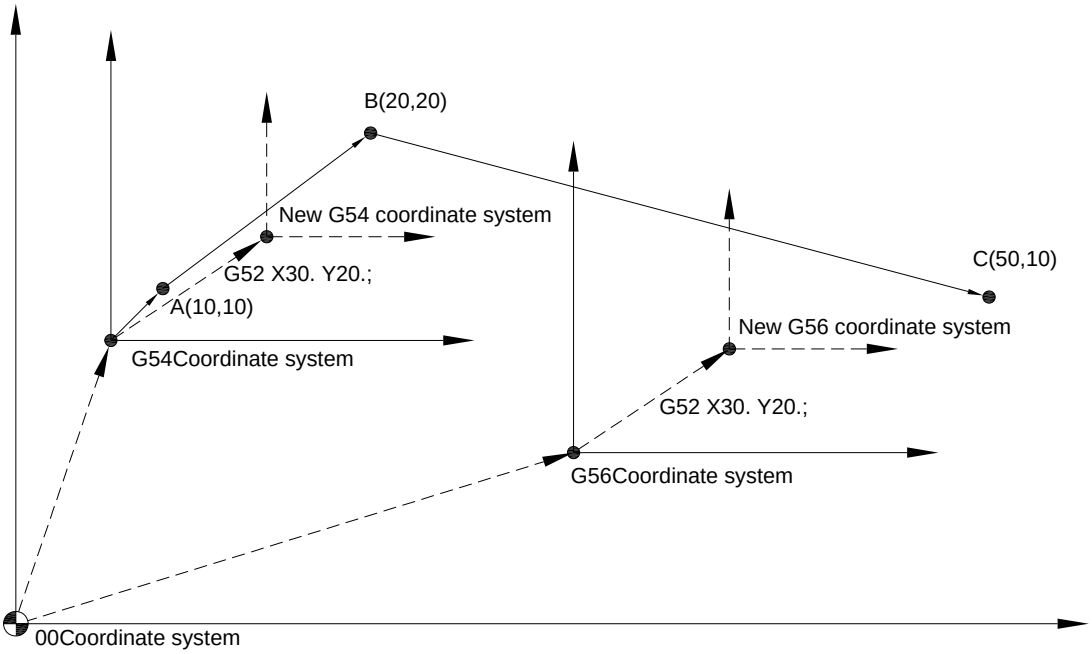

There are two methods to cancel the interval coordinate system set by G52. The first method is to run “manually return to origin” procedure (and parameter #0133 is set to 1); the second method is to run G52 command aincremental, but the argument being used must be the negative value of the argument used by G52 command at the last time.

For example :

G52 X30. Y20.;

..

..

G52 X-30. Y-20;（G52 coordinate system cancel）

G53 Rapid Positioning of Machine Coordinate System

Command Format

G53 <axis><target site>;

Argument Instruction

- Axis

  Specify the name of axis being moved. It can be any combination of X, Y, Z, A, B, C or U, V, W. The only condition is that it must be consistent with the setting of current axis (the 4th axis is set by using the parameter #0122). On the six-axes model M600, parameters #0288 & #0289 are used to control the 5th & 6th axes.

- Target Site

  Machine coordinate of the target point.

Action Instruction

G53 Command can be used to control and move the tool to the specified machine coordinate. Regarding G53 Command, the tool's move methoid is rapid feeding, and the speed can be set by parameters #1000~1003, 1122~1123. Generally G53 Command belongs to "non simultaneous movement". If simultaneous movement is needed, it can be set by parameter #0041. Moreover, G53 Command is effective in single block only, and it can only be used under absolute mode (G90), it will become ineffecitve under incremental mode (G91).

Note that the previously specified Tool Compensation value will be cancelled automatically after the execution of G53.

G54~G59 Manufacturing Coordinate System Selection

Command Format

$$\begin{bmatrix} G54; \\ G55; \\ G56; \\ G57; \\ G58; \\ G59; \end{bmatrix}$$

Action Instruction

Six G codes (G54 to G59) applied in the workpiece coordinate system represent six different coordinate system which can be used in accordance with manufacturing needs.

The origin offset of each coordinate system can be set through 〈OFFSET〉 → 〈coordinate system setting〉; For more information, refer to the operation manual; Moreover, it can also be set by G10 Command, for more information about this refer to G10 Command instruction.

The relationship among each coordinate system is shown as follows: : (The default coordinate system is G54 after the system is boot.)

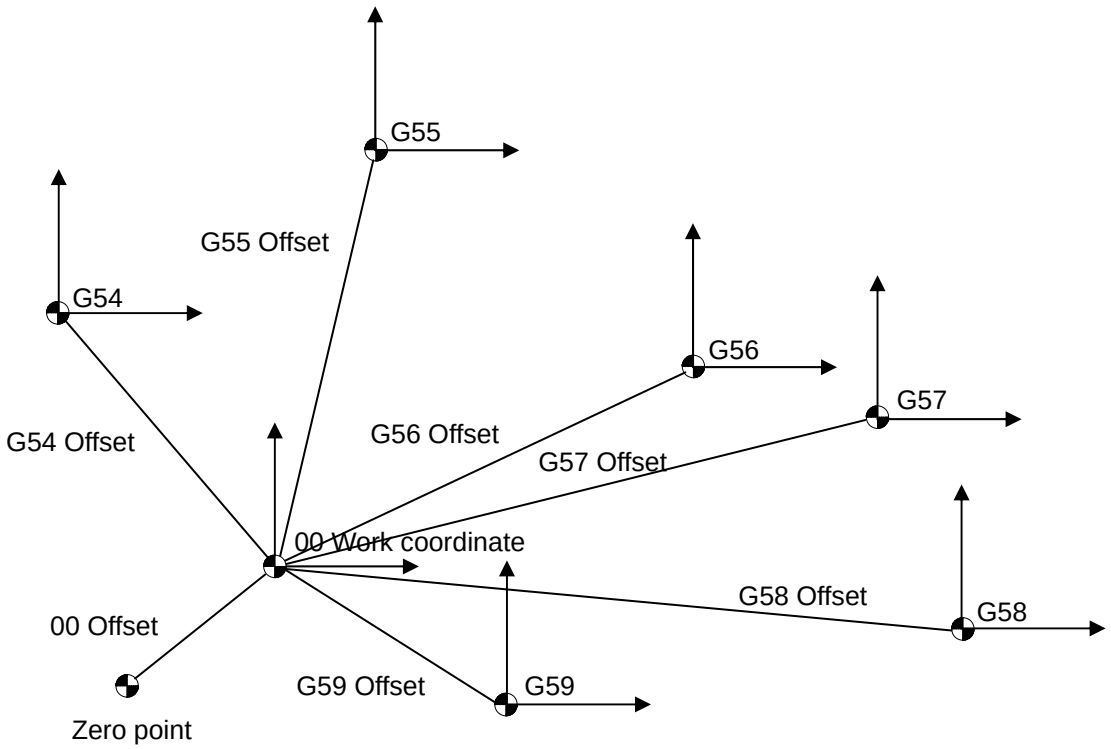

Program Sample

G90 G54 G00 X100. Y100.;

G55 X100. Y100.;（A→B）

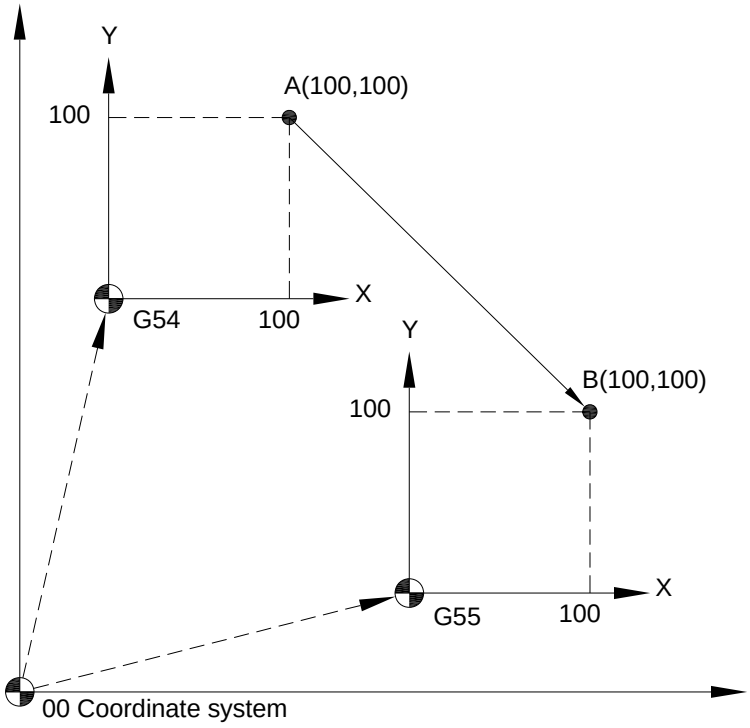

G61, G64 Exact Positioning Mode, General Cutting Mode

Command Format

```
G61;
G64;
```

Argument Instruction

- G61

  Exact positioning mode

- G61

  General cutting mode.

Action Instruction

The function of G61 is the same as that of G09, but the effectiveness of G09 is limited to one block, and the effectiveness of G61 is valid still after a declaration, until G64 (general cutting) is declared. G64 is the default mode of the system, and the G64 mode stays effective unless G61 is declared.

For cutting commands (G01/G02/G03), the positioning precision of each axis can be set by using parameters #0006~0009, 0252~0253; For rapid positioning (G00), the positioning precision of each axis is set by using parameters #0800~0830, 0268~0269. Furthermore, the activation for the correct positioning function of each axis can be enabled or disabled by using parameter #0043.

Illustration

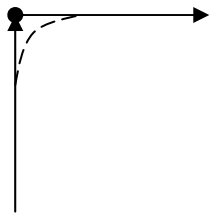

——— Tool path under G61 mode

– – – – – Tool path under G64 mode

Program Sample

G61 G91 G01 Y100. F200.; ---------- (Correct positioning)

X100.; ---------- (Correct positioning)

G64; ---------- (Cancellation of Correct positioning)

G65 Simple Call

Command Format

G65 P__ L__ <arguments…>;

Argument Instruction

- P__

  The macro program number being called (Macro program name without four digits after ”O”). The system alarm will be enabled if there’s no input. [INT 3111: no called program name (no input of P address)].

- L__

  Times of iteration. The default setting value is 1 if no specific input.

In addition to arguments P and L, more NC addresses (English alphabets excluding G, L, N, O, P) can be used to induct arguments, no limit of sequential order, and these arguments are corresponding to the local variables used in the macro program. The comparison charts are shown as follows:

NC Address	Local Variable
A	#1
B	#2
C	#3
D	#4
E	#5
F	#6
H	#8

NC Address	Local Variable
I	#9
J	#10
K	#11
M	#13
Q	#17
R	#18
S	#19

NC Address	Local Variable
T	#20
U	#21
V	#22
W	#23
X	#24
Y	#25
Z	#26

G65 Simple Call

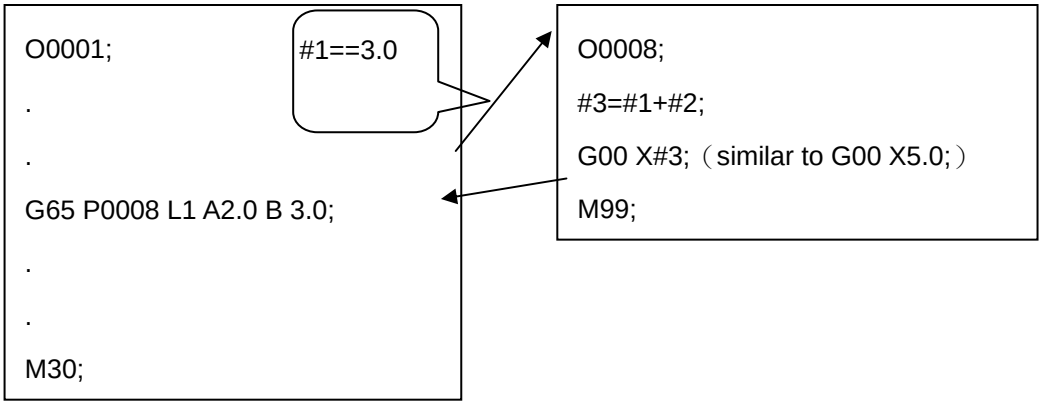

In G65 blocks, G65 must be written before all arguments. The nest type call can be done towards G65, and up to four levels are available for the combination of G65 and G66 (The main program is not included, and the main program is level 0), and each level has its own local variables as shown below :

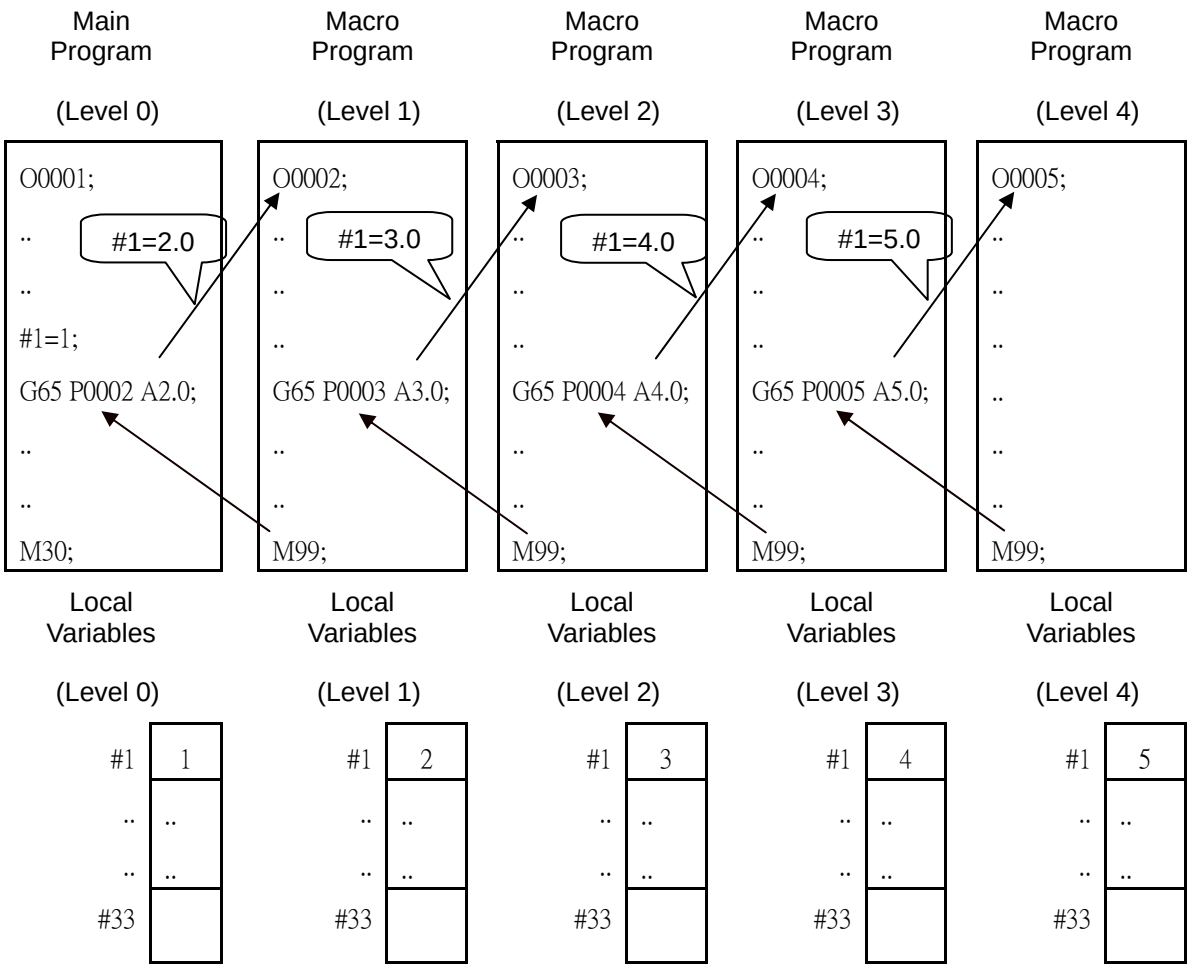

G66 Macro Program Mode Call

Command Format

G66 P__ L__ <arguments…>;

Argument Instruction

- P__

  The macro program times to be called (Macro program name excluding the 4 digits after “O”). The system alarm will be triggered if no input available. [INT 3111: no called program name (no input of P address)].

- L__

  Times of iteration. The default setting value is 1 if no input.

  In addition to arguments P and L mentioned above, more NC addresses (English alphabets excluding G, L, N, O, P) can be used to induct arguments without any previously defined order, and these arguments are corresponding to the local variables used in the macro program. Refer to the comparison charts listed in G65.

Action Instruction

The difference between G66 and G65 is that the latter only calls macro program for once, but the macro programs called by G66 will be called aincremental after each movement block is completed until the calling mode is cancelled by G67.

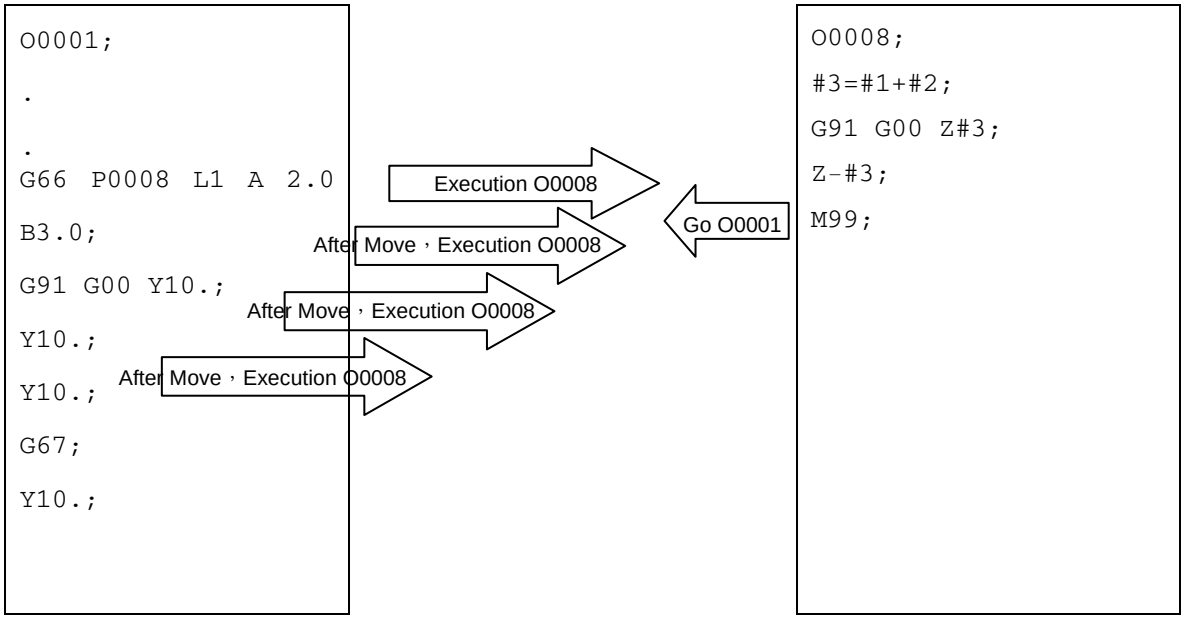

In G66 blocks, G66 must be written before all arguments. Like G65, the nest type call could be done by G66, and up to 4 levels are available for the combination of G66 and G65, (The main program is not included, and the main program is level 0), but the G66 arguments (corresponding to local variables of macro program) can only be set for once in G66 block, and then the mode calling will not be reset aincremental.

G67 Macro Program Mode Call Cancel

Command Format

```
G67;
```

Action Instruction

G67 is used to cancel the function of G66 macro program mode call.

G68, G69 Coordinate System Rotation

Command Format

$$G68\begin{bmatrix} G17\ X\_\_\ Y\_\_ \\ G18\ Z\_\_\ X\_\_ \\ G19\ Y\_\_\ Z\_\_ \end{bmatrix} R\_\_;$$
$$G69;$$

Argument Instruction

- X__Y__

  Specify the rotation center coordinate in the G17 plane.

- Z__X__

  Specify the rotation center coordinate in the G18 plane.

- Y__Z__

  Specify the rotation center coordinate in the G19 plane.

  If the rotation center is not specified, the current position of G68 will be the rotation center.

- R__

  Rotation angle, positive value denotes a counter-clockwise rotation. The input unit of this argument is determined by parameter #0130. If the setting value of parameter #0130 is 1, the input unit of this argument is degree; If the setting value of parameter #0130 is 0, the input unit of this argument is 0.001 degree. If argument R__ is not specified, the default value can be derived from parameter #1091; parameter #0142 can be used to determined whether the rotation angle is an absolute value or an incremental value.

Illustration

G90 G54 G17 G00 X0. Y0.;

G68 X20. Y10. R60.;

G01 X20. Y10. F1000.;

G91 X10.;

X-10. Y10.;

Y-10.;

G90 G69 G00 X0. Y0.;

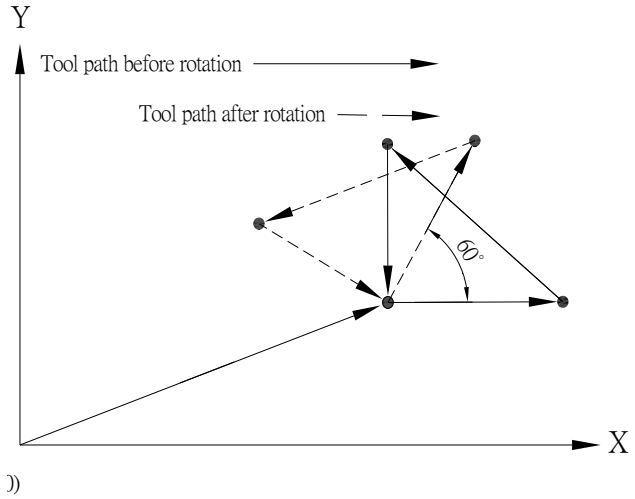

If the moving block subsequent to G68 is incremental mode (G91), the current position of G68 will be considered as the rotation center.

Illustration :

```
G90 G54 G17 G00 X0. Y0.;
G68 X20. Y10. R60.;
G91 G01 X20. Y10. F1000.;
X10.;
X-10. Y10.;
Y-10.;
G90 G69 G00 X0. Y0.;
```

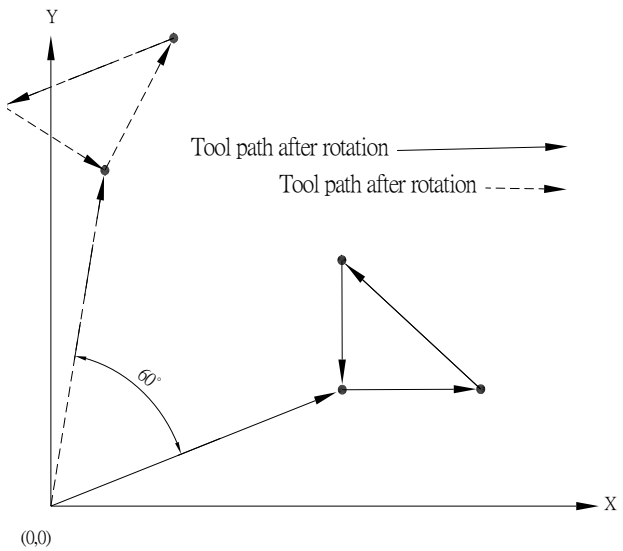

G73 Rapid Peck Drilling Cycle

Command Format

```
G73 X__ Y__ Z__ R__ Q__ K__ F__;
```

Argument Instruction

- X__Y__
  Coordinate of hole position (mm).
- Z__
  Coordinate of hole bottom (mm).
- R__
  Coordinate of R point (i.e. retraction point) (mm).
- Q__
  Cutting feedrate per time (mm), always a positive value.
- K__
  Iteration times
- F __
  Feedrate (G94 mm/min) (G95 mm/rev).
  The Z-axis manufacturing retraction volume is set by parameter #0150. The input value is a minimum unit, and the decimal timess are not allowed.

Action Instruction (Taking G17 plane for example)

1. Fast position to the hole position (X, Y, yet maintain the original tool height)；
2. Fast position to the coordinate of R point (R)；
3. Peck drill with specified cutting feedrate and spindle speed, the feed is (Q)
4. Fast return, and the retraction amount is determined by parameter #0150.
5. Peck drill with specified cutting feedrate and spindle speed, the feed is “peck drilling feed + peck drilling retraction amount)
6. Fast return, and the retraction amount is determined by parameter #0150.
7. Repeat steps 5~6 until the hole bottom is cut
8. In G98 mode, fast return to the starting point; In G99 mode, fast return to the R point;
9. If K is to be specified (> 1), repeat steps 2~6 until reaching specified drilling times, otherwise procedure ends;

10. In G91 mode, argument R specifies the distance between R point and the starting point; argument Z specifies the distance between the hole bottom and R point; if K is specified (> 1), repeat steps 2~8, between each iteration make a location offset according to previously specified X, Y, and continue to drill.

11. The difference between G73 and G83 is that G73's retraction amount is determined by parameter #0150, and the later one should return to R point everytime.

G73 Rapid Peck Drilling Cycle

Illustration

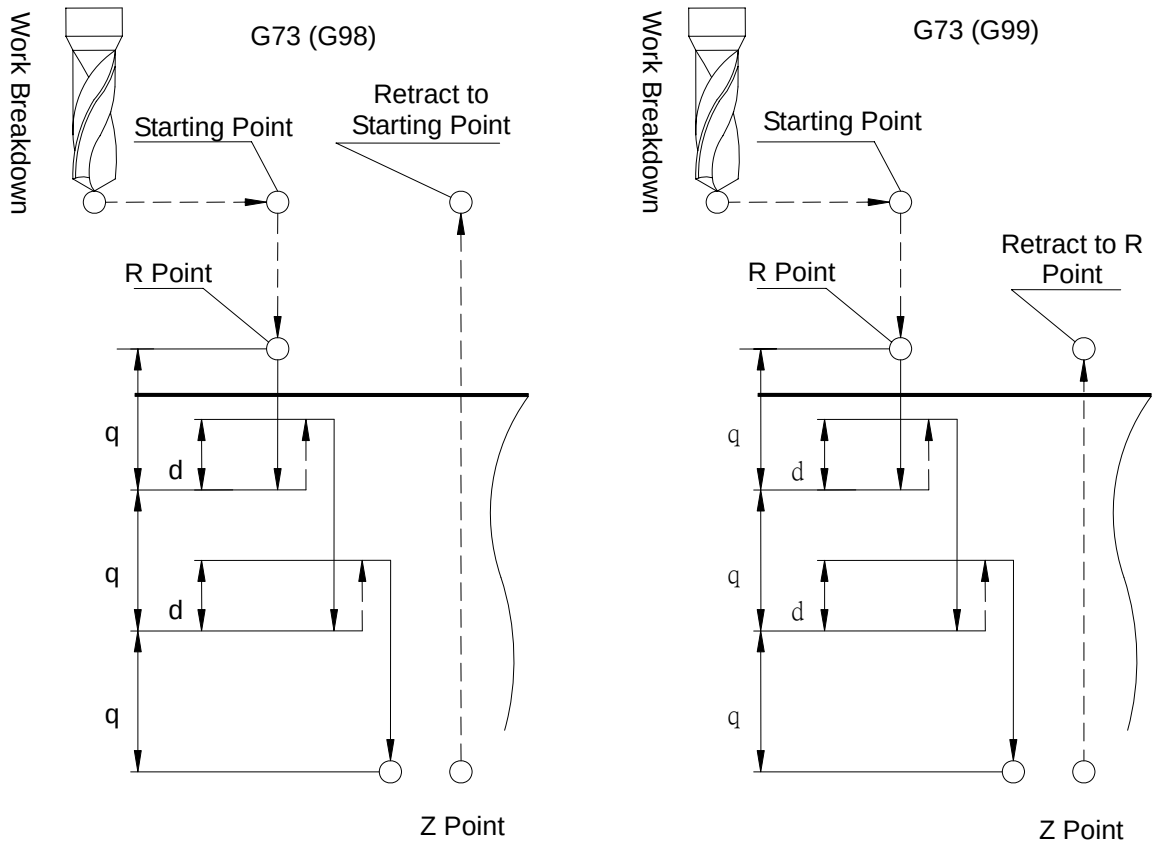

Program Sample

```
M03 S1000;
G17 G90 G00 G54 X0. Y0.;
G00 Z100.;
G99 G73 X0. Y0. Z-30. R10. Q4. K1 F100.;---------- (1)
X-15.;---------- (2)
X-30.;---------- (3)
X-30. Y15.;---------- (4)
G80 G91 G28 X0. Y0. Z0.;
M05;
```

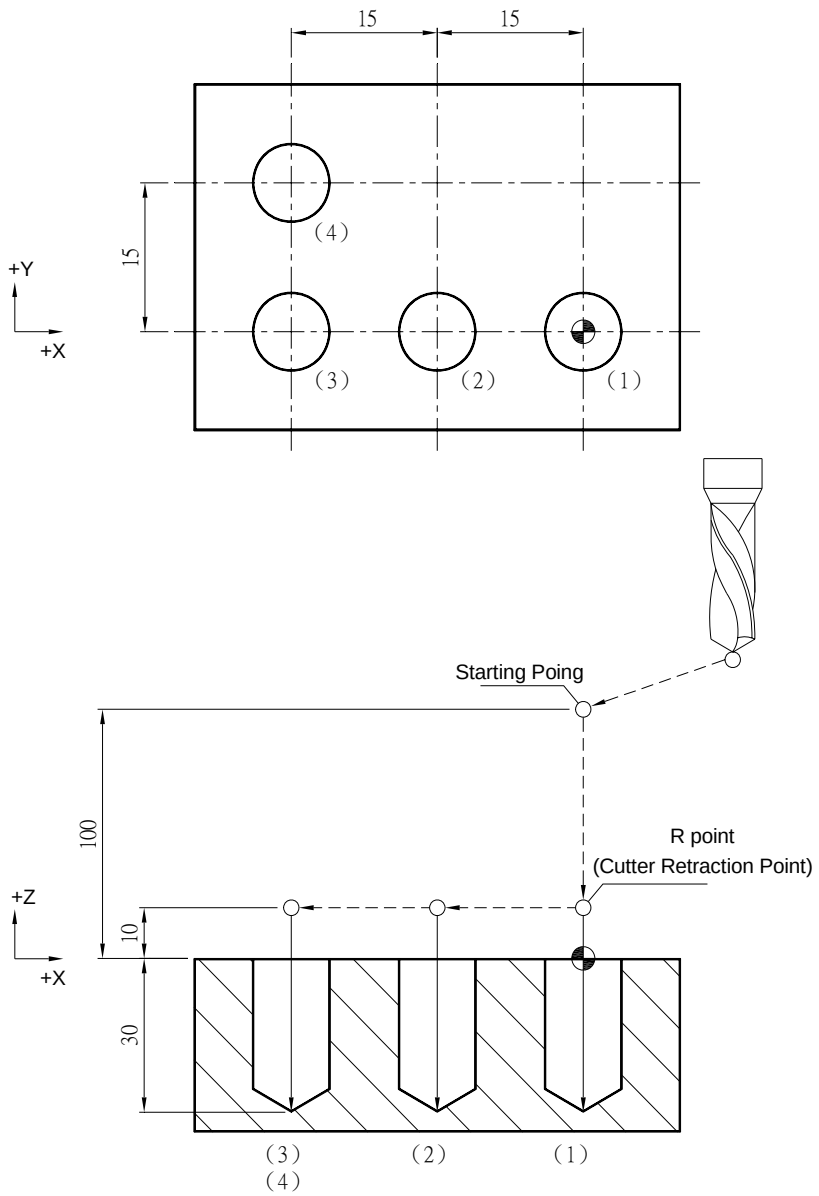

G73 Rapid Peck Drilling Cycle

```
M03 S1000;
G17 G90 G00 G54 X0. Y0.;
G00 Z100.;
G98 G73 X0. Y0. Z-30. R10. Q4. K1 F100.;---------- (1)
X-15.;---------- (2)
X-30.;---------- (3)
X-30. Y15.;---------- (4)
G80 G91 G28 X0. Y0. Z0.;
M05;
```

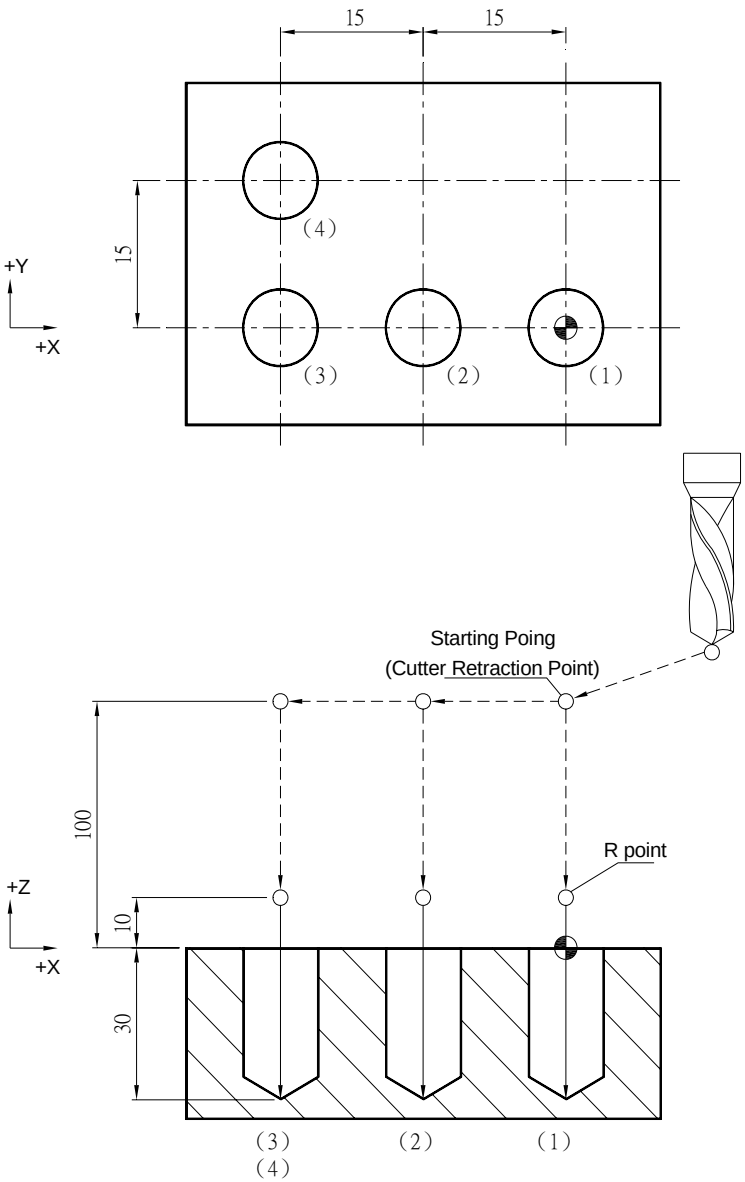

```
M03 S1000;
G17 G90 G00 G54 X0. Y0.;
G43 G00 H01 Z150.;
G00 Z100.;
G99 G73 X0. Y0. Z-20. R10. Q4. K1 F100.;---------- (1)
G91 X-10. K3 ;---------- (2)
Y10.   K3 ;---------- (3)
G80 G91 G28 X0. Y0. Z0.;
M05;
```

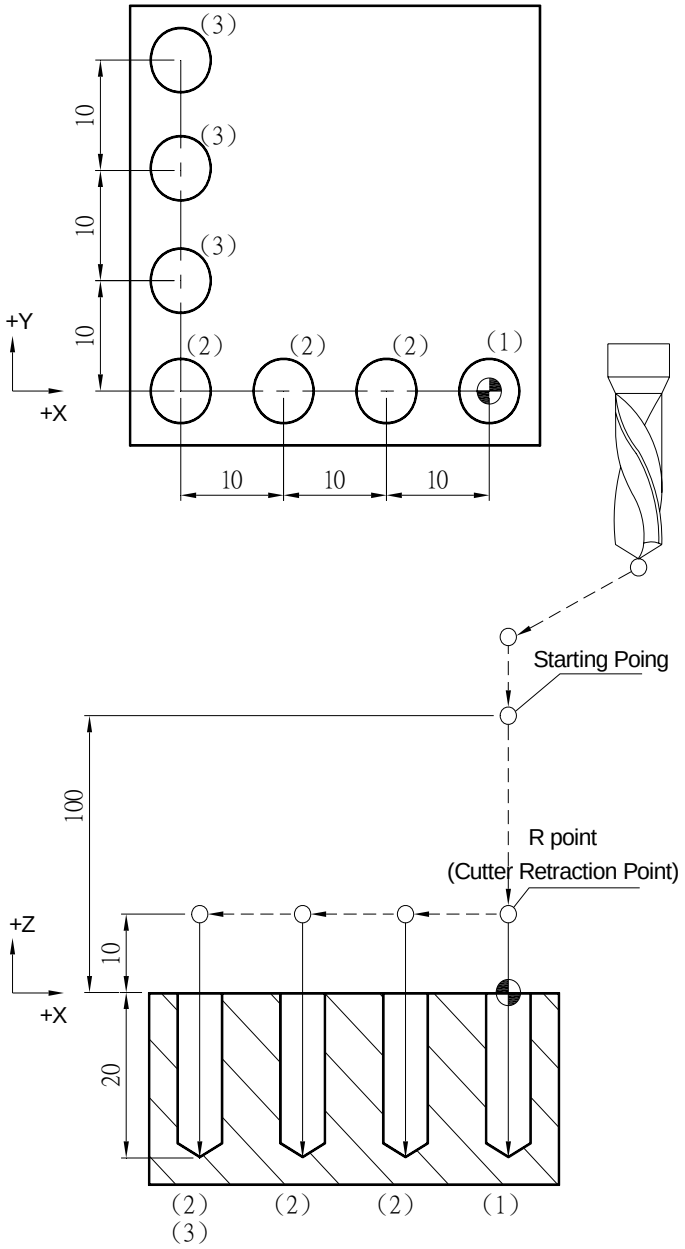

```
M03 S1000;
G17 G90 G00 G54 X0. Y0.;
G43 G00 H01 Z150.;
G00 Z100.;
G98 G73 X0. Y0. Z-20. R10. Q4. K1 F100.;---------- (1)
G91 X-10. K3;------------------------------------- (2)
Y10.   K3; --------------------------------------- (3)
G80 G91 G28 X0. Y0.Z0.;
M05;
```

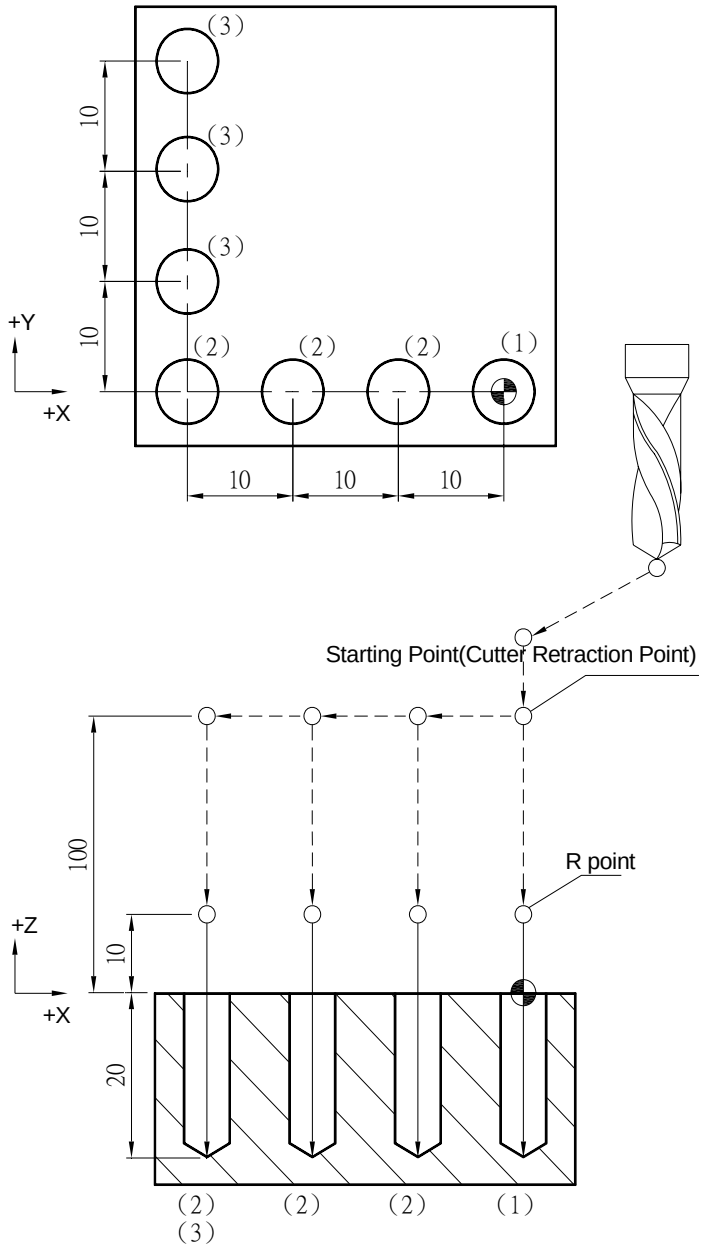

```
M03 S1000;
G17 G90 G00 G54 X0. Y0.;
G00 Z100.;
G99 G73 X0. Y0. Z-20. R10. Q4. K1 F100.;---------- (1)
X-10. Z-30.;---------- (2)
X20.   Z-40.;---------- (3)
G80 G91 G28 X0. Y0. Z0.;
M05;
```

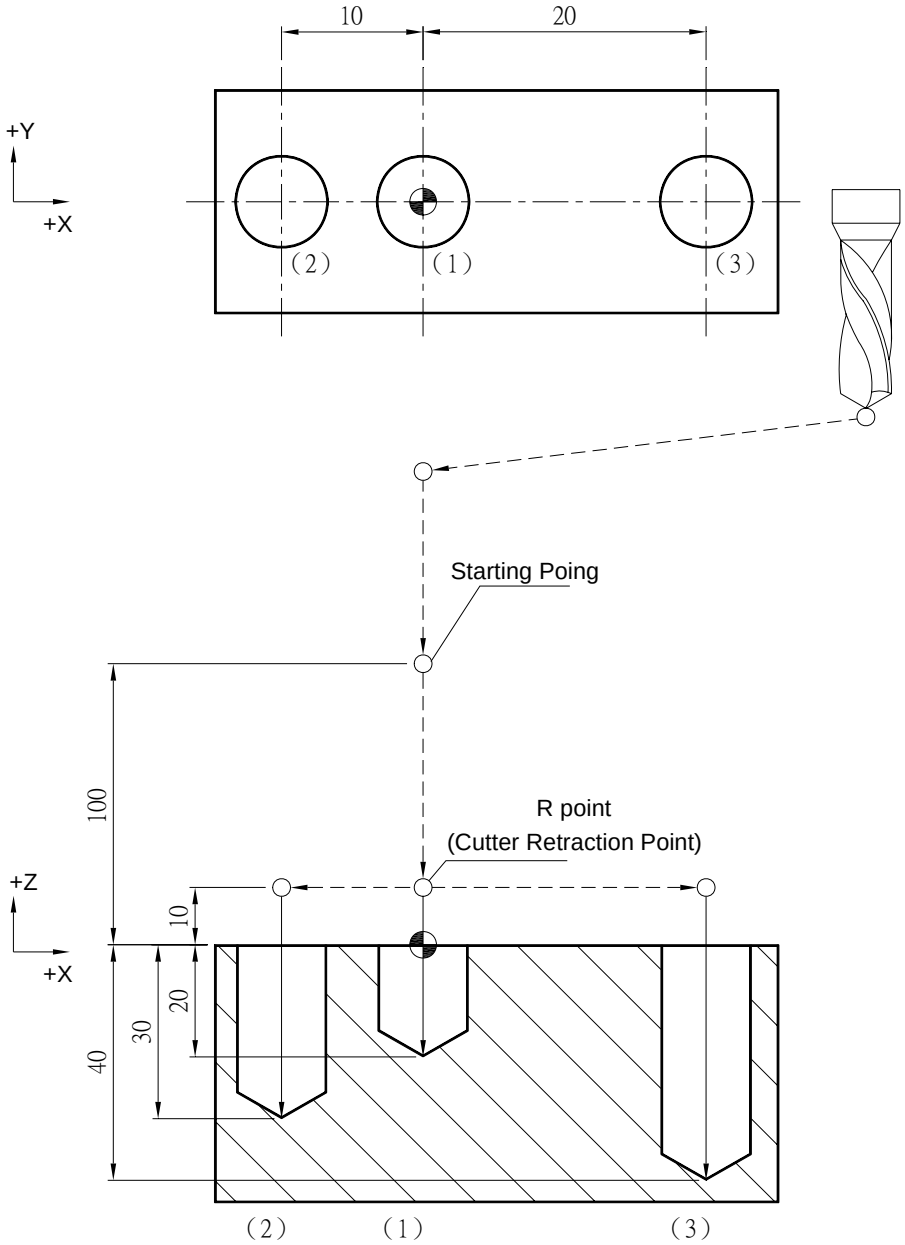

M03 S1000;

G17 G90 G00 G54 X0. Y0.;

G00 Z100.;

G98 G73 X0. Y0. Z-20. R10. Q4. K1 F100.;---------- (1)

X-10. Z-30.;---------- (2)

X20. Z-40.;---------- (3)

G80 G91 G28 X0. Y0. Z0.;

M05;

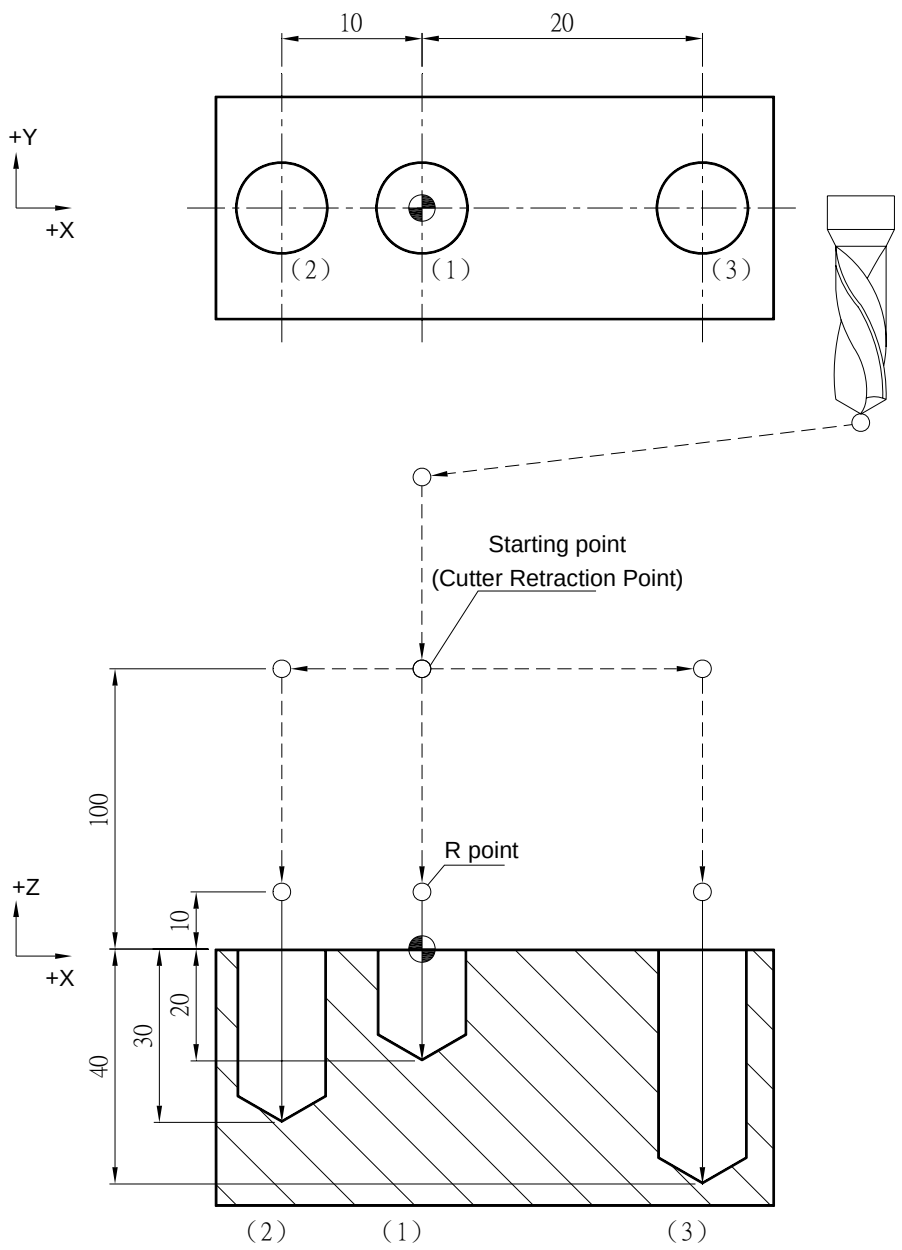

G74 Left-Handed Screw Thread Tapping Cycle

Command Format

```
G74 X__ Y__ Z__ R__ P__ K__ F__;
```

Argument Instruction

- X__Y__
  Coordinate of the hole position (mm).
- Z__
  Coordinate of the hole bottom (mm).
- R__
  Coordinate of R point (i.e. retraction point) (mm).
- P__
  Dwell time in the hole bottom (1/1000), minimum unit, decimal timess are not allowed.
- K__
  Times of iteration.
- F__
  Cutting feedrate (G94 mm/min) (G95 mm/rev).

If add M29 command before G74, it will become left-handed thread rigid tapping.

Action Instruction (taking G17 plane for example)

1. Fast position to the hole position (X, Y, yet maintain the original tool height);
2. Fast position to the coordinate of R point (R);
3. Tapping begins, and spindle rotates counter-clockwisely;
4. Cut to the hole bottom position (Z) with specified cutting feedrate and spindle speed
5. Stop the spindle; if P is specified,dwell at the hole bottom for specified time;
6. Spindle rotates clockwisely, cut to R point with specified cutting feedrate and spindle speed
7. Tapping ends, spindle stops; if P is specified, dwell at R point for specified time.
8. In G98 mode, fast return to the starting point; In G99 mode, fast return to R point;
9. If K is specified (> 1), repeat steps 2~8 until reach specified tapping iteration times; otherwise procedure ends;

10. In G91 mode, argument R is to specified the distance between R point and the starting point; argument Z specifies the distance between hole bottom position and R point; if K is specified (> 1), repeat steps 2~8, between each iteration make a location offset according to previously specified X, Y, and continue tapping.
11. In G94 mode, the cutting feedrate F = rotating speed (S) × pitch of screw thread (PITCH); In G95 mode, the cutting feedrate F = pitch of screw thread (PITCH).

Illustration

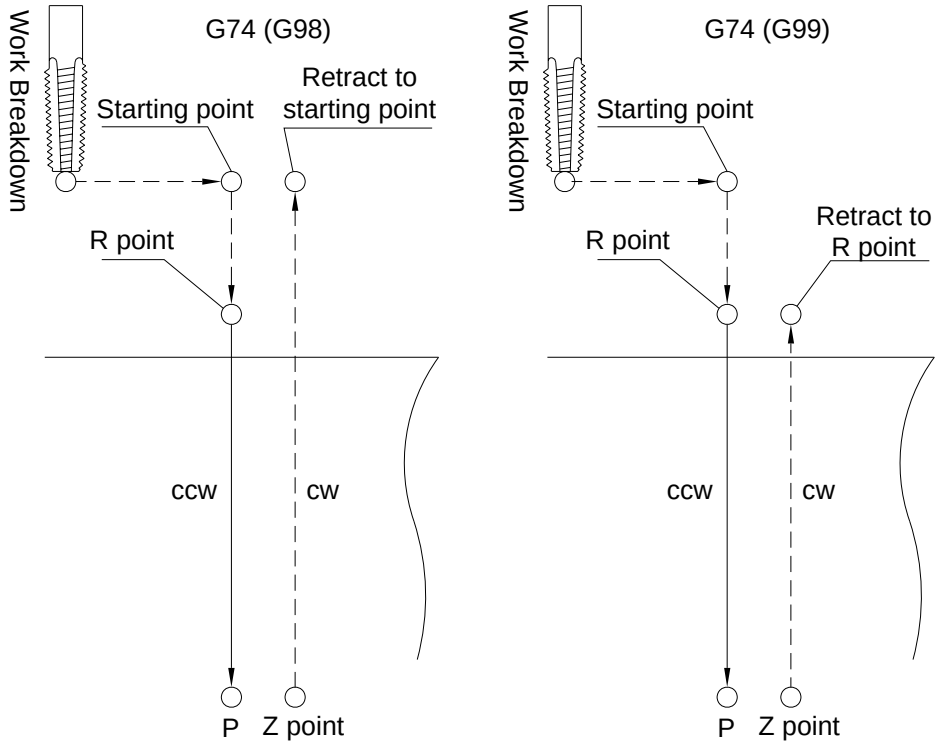

G74 Left-Handed Screw Thread Tapping Cycle

Program Example :

```
G17 G90 G00 G54 X0. Y0.;
G00 Z100.;
M29 S1000;
G99 G74 X0. Y0. Z-30. R10. P1000 K1 F1000.; ---------- (1)
X-15.;---------- (2)
X-30.;---------- (3)
X-30. Y15.;---------- (4)
M28;
G91 G80 G28 X0. Y0. Z0.;
```

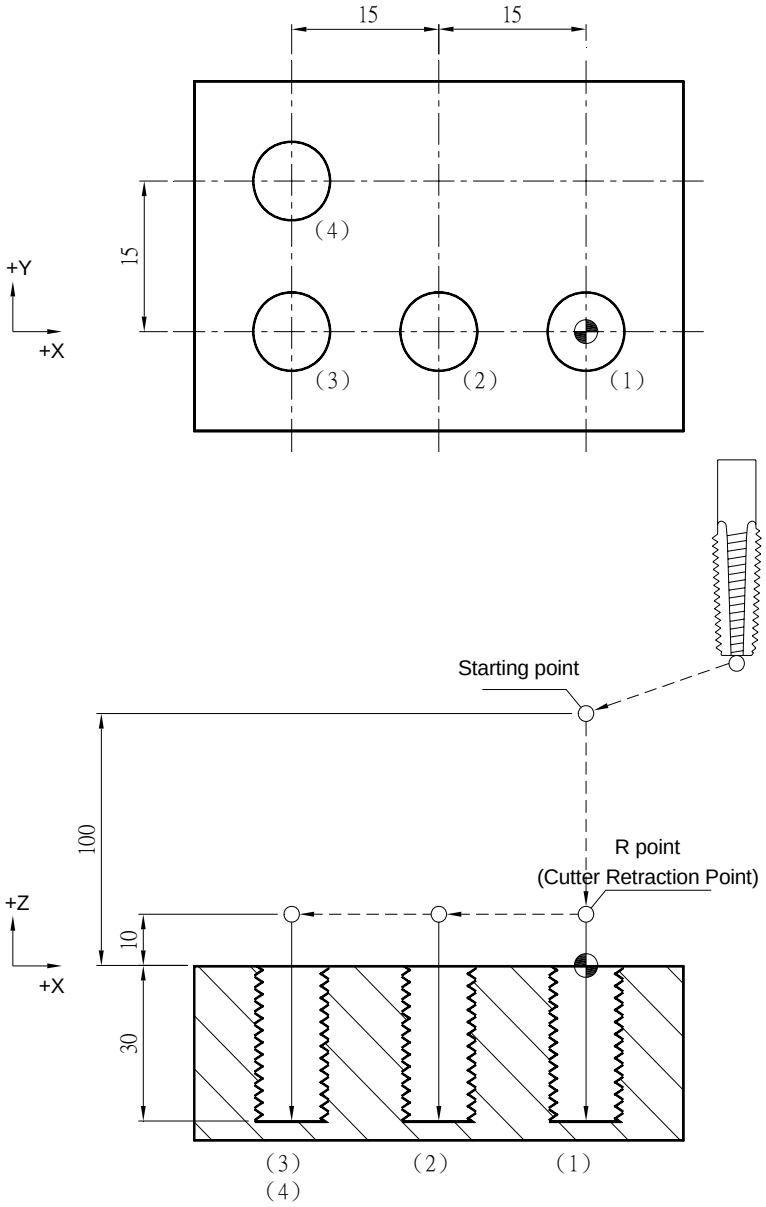

G17 G90 G00 G54 X0. Y0.;

G00 Z100.;

M29 S1000;

G98 G74 X0. Y0. Z-30. R10. P1000 K1 F1000.; ---------- (1)

X-15.;---------- (2)

X-30.;---------- (3)

X-30. Y15.;---------- (4)

M28;

G91 G80 G28 X0. Y0. Z0.;

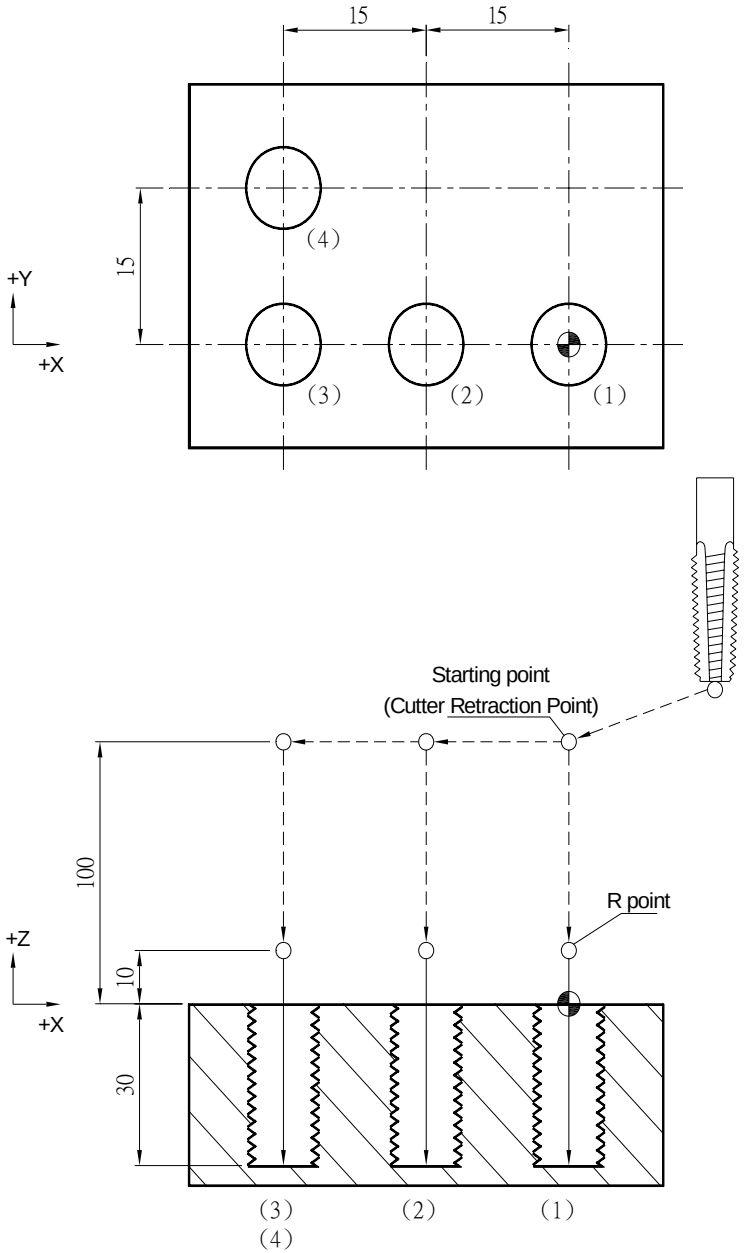

G74 Left-Handed Screw Thread Tapping Cycle

```
G17 G90 G00 G54 X0. Y0.;
G00 Z100.;
M29 S1000;
G99 G74 X0. Y0. Z-20. R10. P1000 K1 F1000.; ---------- (1)
G91 X-10. K3;---------- (2)
Y10. K3; ---------- (3)
M28;
G91 G80 G28 X0. Y0. Z0.;
```

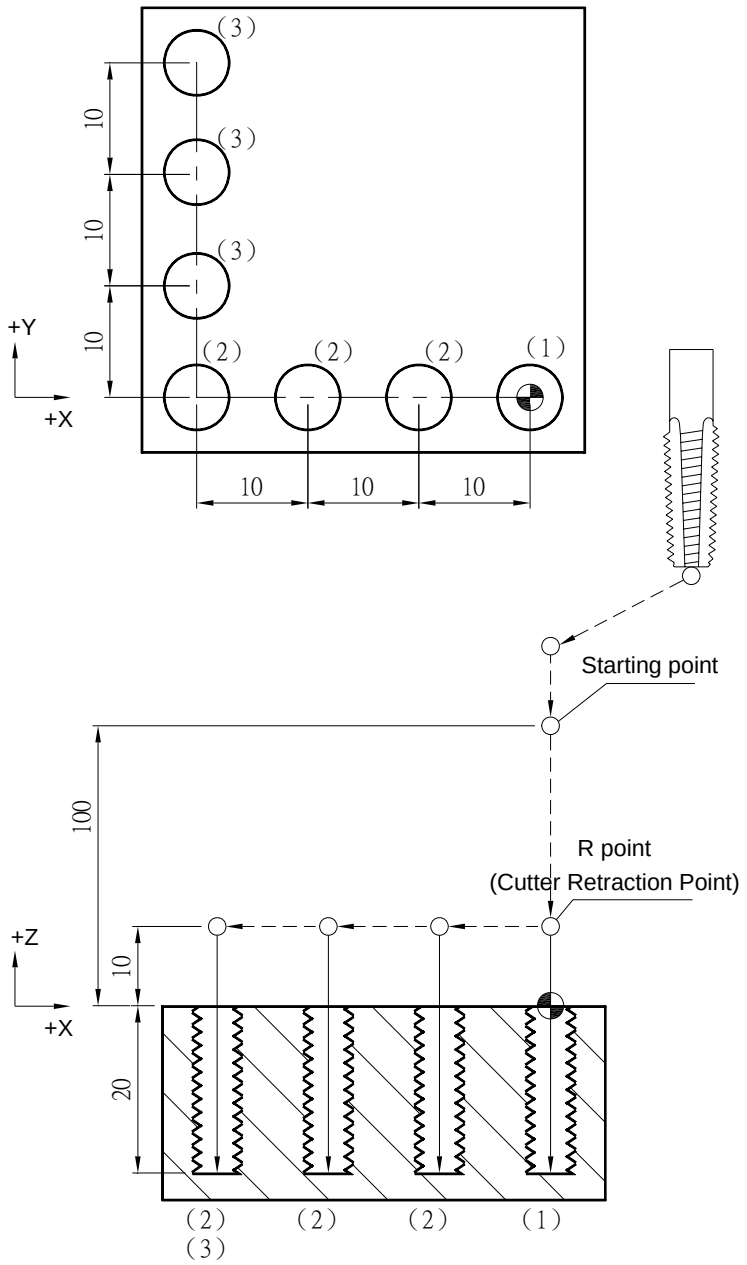

```
G17 G90 G00 G54 X0. Y0.;
G00 Z100.;
M29 S1000;
G98 G74 X0. Y0. Z-20. R10. P1000 K1 F1000.; ---------------------------------------------------------- (1)
G91 X-10. K3 ; ---------------------------------------------------------------------------------------- (2)
Y10.    K3 ; ------------------------------------------------------------------------------------------ (3)
M28;
G91 G80 G28 X0. Y0. Z0.;
```

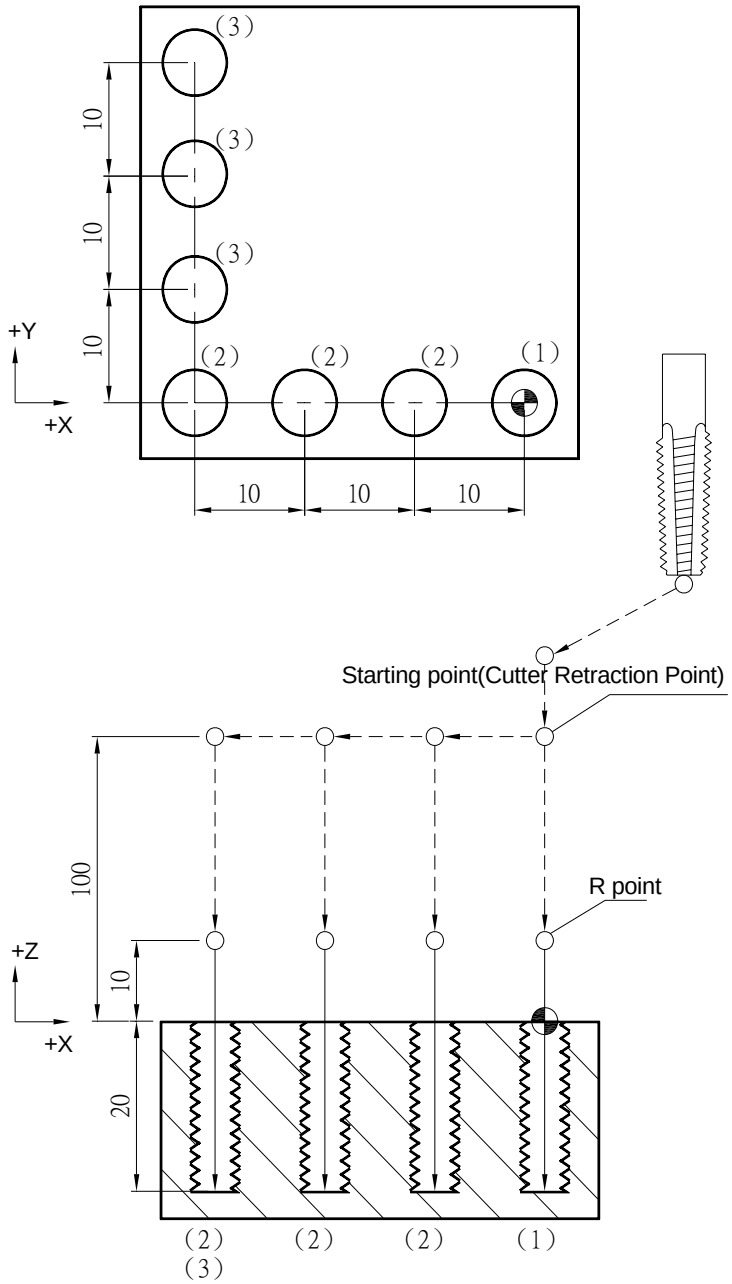

G74 Left-Handed Screw Thread Tapping Cycle

```
G17 G90 G00 G54 X0. Y0.;
G00 Z100.;
M29 S1000;
G99 G74 X0. Y0. Z-20. R10. P1000 K1 F1000.; ---------- (1)
X-10. Z-30.; ---------- (2)
X20.   Z-40.; ---------- (3)
M28;
G91 G80 G28 X0. Y0. Z0.;
```

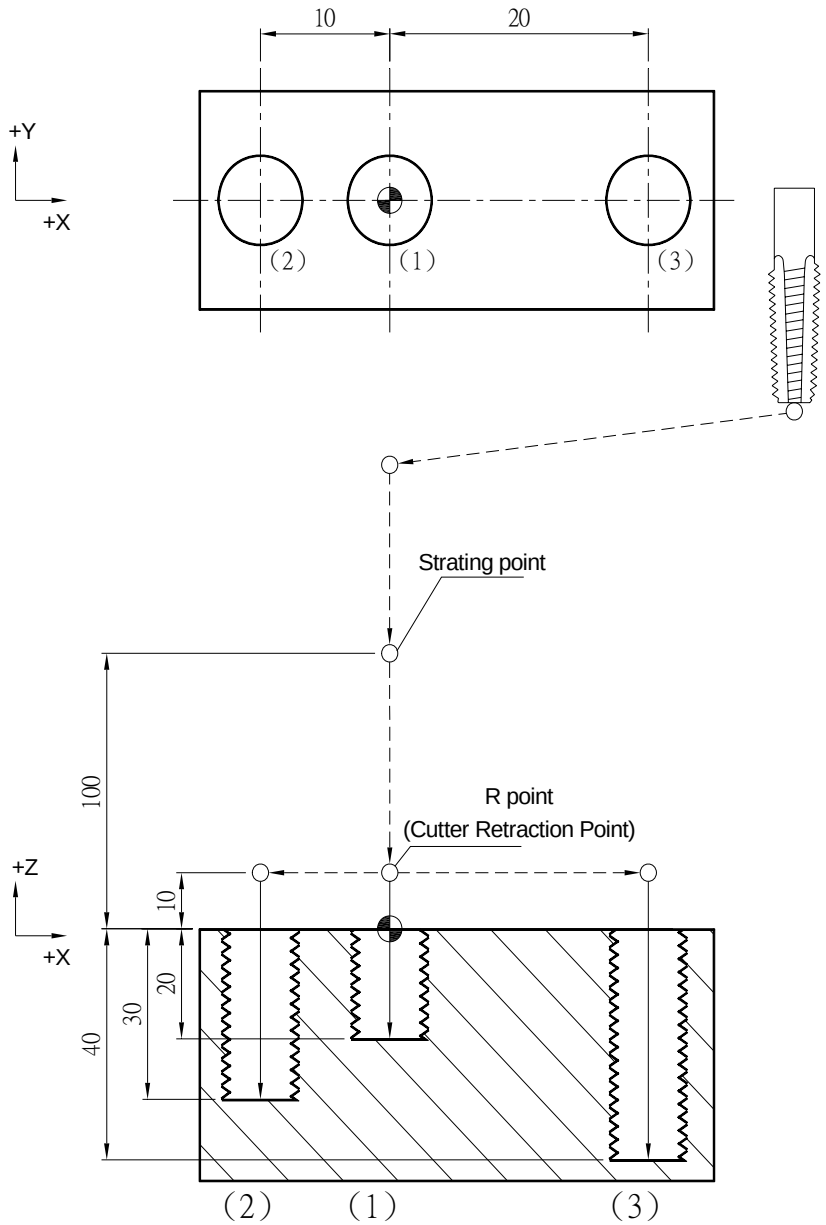

G17 G90 G00 G54 X0. Y0.;

G00 Z100.;

M29 S1000;

G98 G74 X0. Y0. Z-20. R10. P1000 K1 F1000.; ---------- (1)

X-10. Z-30.; ---------- (2)

X20. Z-40.; ---------- (3)

M28;

G91 G80 G28 X0. Y0 Z0.;

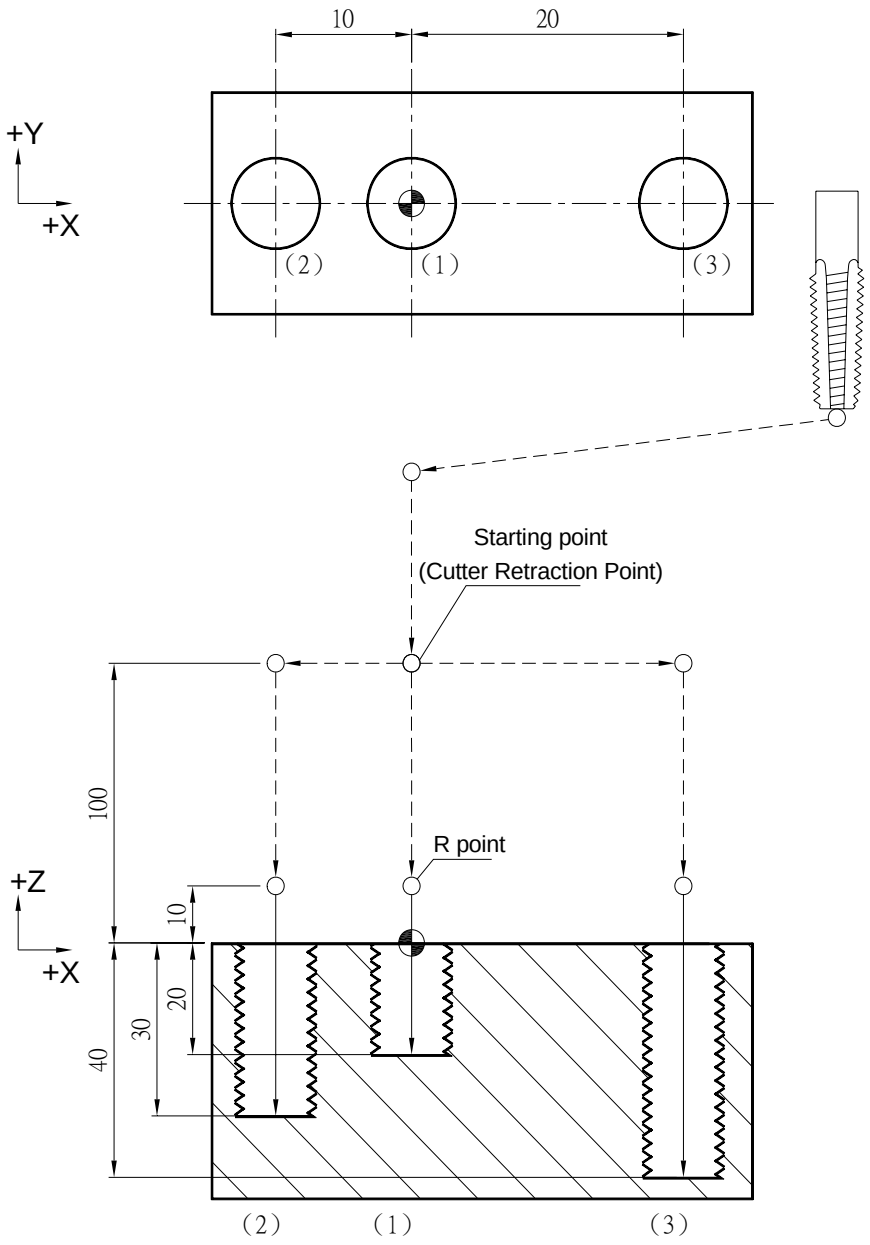

G76 Fine Boring Cycle

Command Format

```
G76 X__ Y__ Z__ R__ P__ Q__ K__ F__;
```

Argument Instruction

- X__Y__

  Coordinate of hole position (mm).

- Z__

  Coordinate of hole bottom (mm).

- R__

  Coordinate of R point (i.e. retraction point) (mm).

- Q__

  Offset of hole bottom (mm), and the migration direction is set by system parameter #0121.

- K__

  Times of iterations.

- F__

  Feedrate (G94 mm/min) (G95 mm/rev).

Action Instruction (taking G17 plane for example)

1. Fast position to the hole position (X, Y, yet maintain the original height of tool);
2. Fast position to the coordinate of R point (R);
3. Cut to the hole bottom position (Z) with specified cutting feedrate and rotation speed of spindle;
4. If P is specified, dwell at the hole bottom position for specified time;
5. Spindle stops, execute M19 to do spindle positioning;
6. Tool migrates, the migration distance is set by argument Q, and the migration direction is set by parameter #0121;

7. In G98 mode, fast return to the starting point; In G99 mode, fast return to the coordinate of R point;
8. Tool migrates, return to the original hole coordinate (reverse actions of step 6);
9. Disable spindle positioning mode, and the spindle rotates;
10. If K is specified (> 1) , repeat steps 2~9 until obtaining specified times of boring cycle; otherwise procedure ends;
11. In G91 mode, argument R is to specified the distance between R point and the starting point; argument Z specifies the distance between hole bottom position and R point; if K is specified (> 1), after each boring procedure (steps 2~9), the hole position will have a incremental offset according to specified X, Y, and then continues boring process.

Illustration

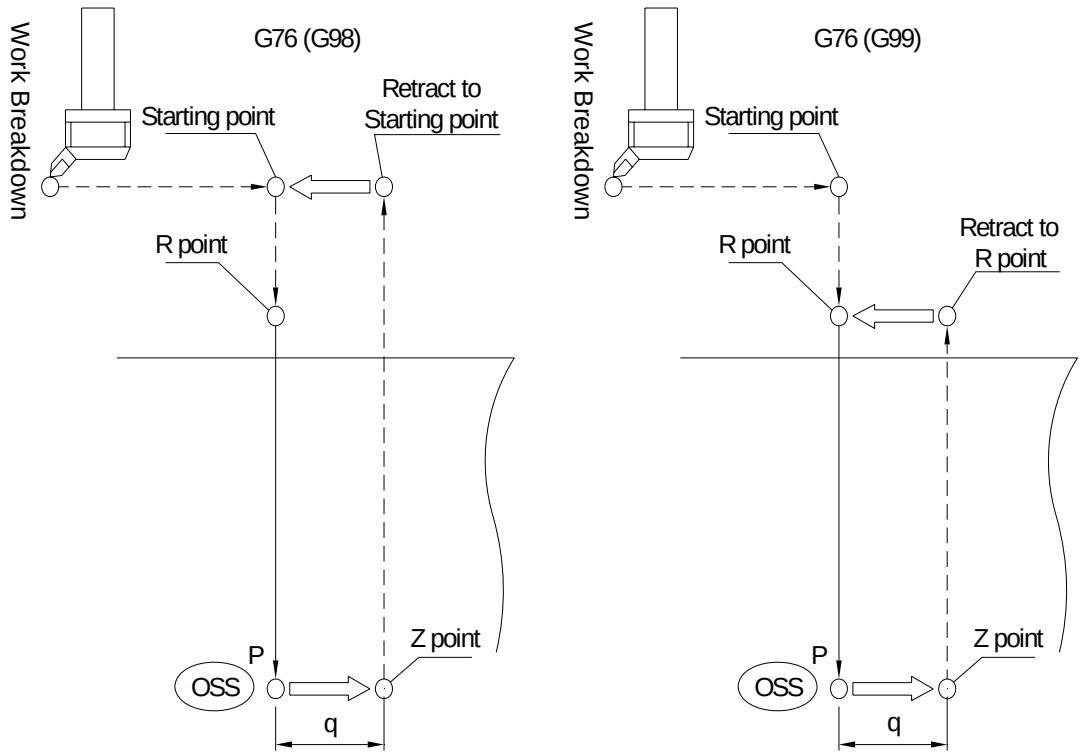

Program Sample

```
M03 S1000;
G17 G90 G00 G54 X0. Y0.;
G00 Z100.;
G99 G76 X0. Y0. Z-30. R10. P1000 Q5. K1 F100.; ---------- (1)
X-15.;---------- (2)
X-30.;---------- (3)
X-30. Y15.;---------- (4)
G80 G91 G28 X0. Y0. Z0.;
M05;
```

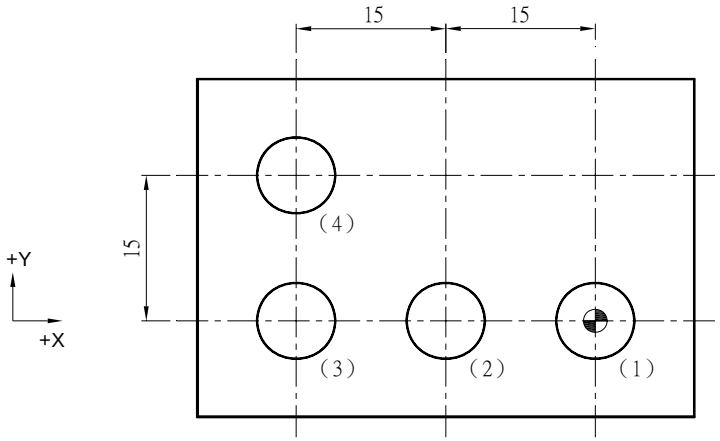

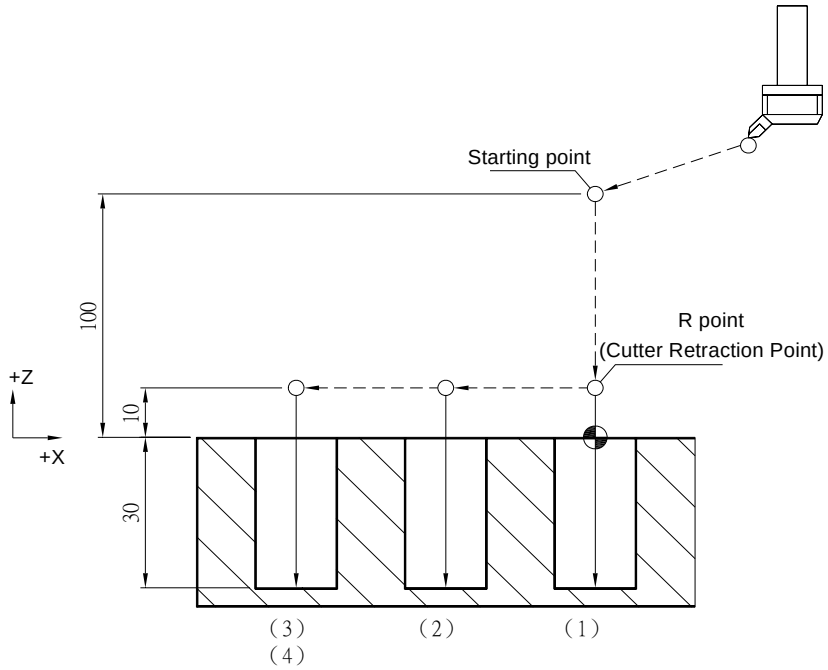

```
M03 S1000;
G17 G90 G00 G54 X0. Y0.;
G00 Z100.
G98 G76 X0. Y0. Z-30. R10. P1000 Q5. K1 F100.; ---------- (1)
X-15.;---------- (2)
X-30.;---------- (3)
X-30. Y15.;---------- (4)
G80 G91 G28 X0. Y0. Z0.;
M05;
```

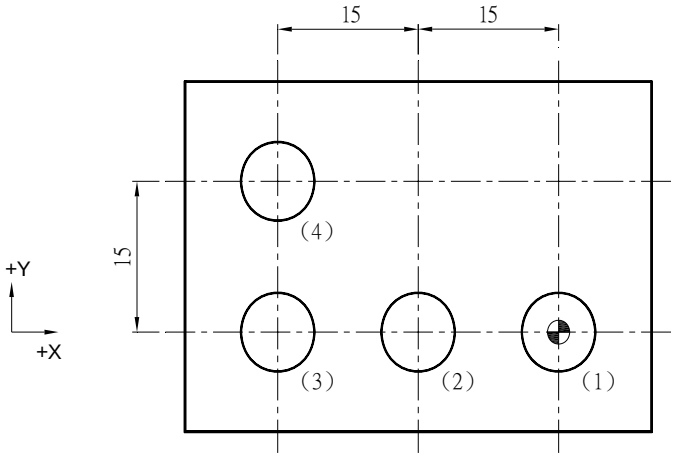

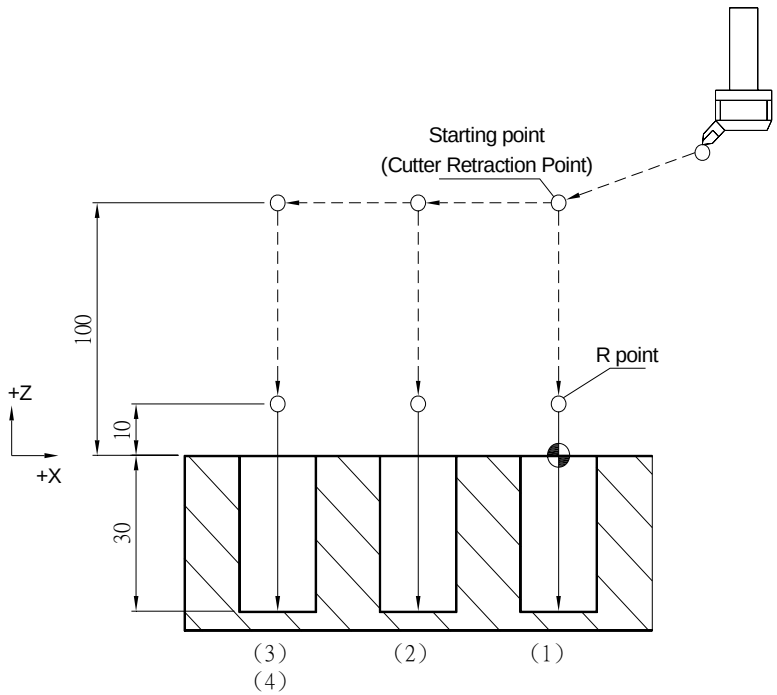

```
M03 S1000;
G17 G90 G00 G54 X0. Y0.;
G00 Z100.;
G99 G76 X0. Y0. Z-20. R10. P1000 Q5. K1 F100.; ---------- (1)
G91 X-10. K3;---------- (2)
Y10.   K3; ---------- (3)
G80 G91 G28 X0. Y0. Z0.;
M05;
```

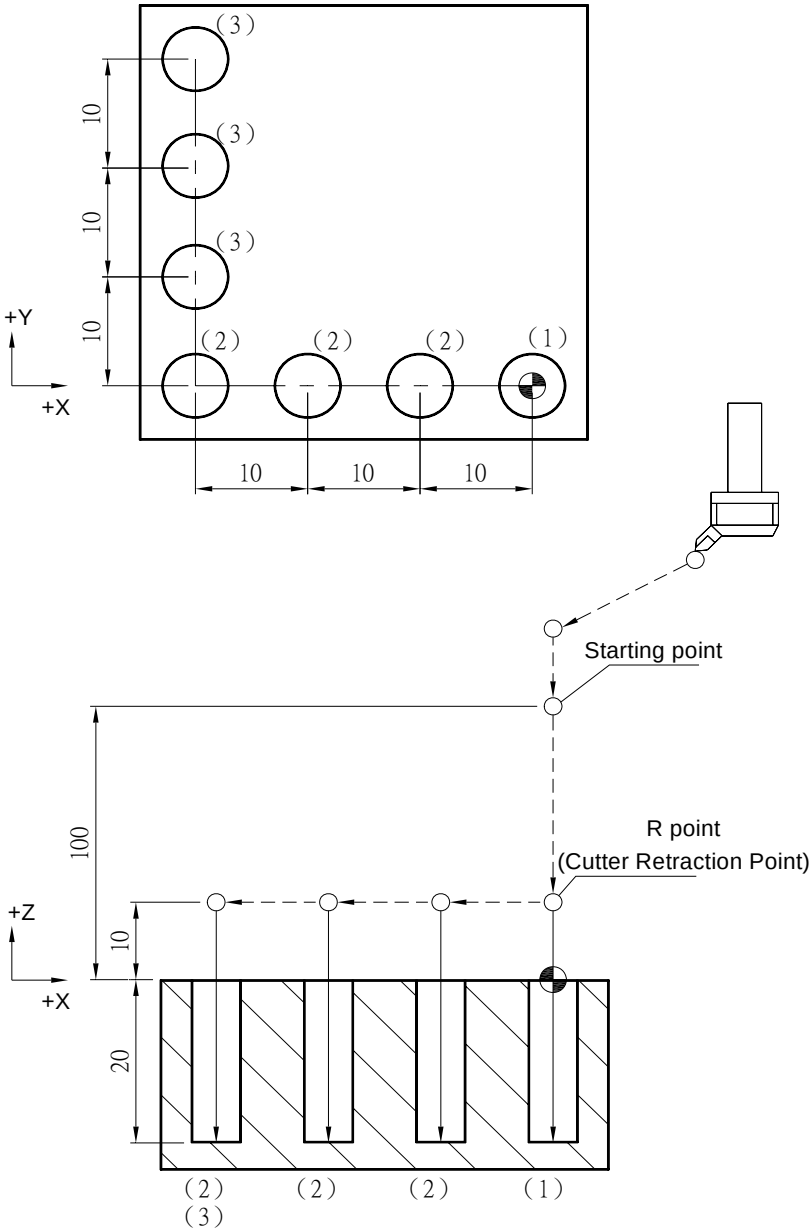

M03 S1000;

G17 G90 G00 G54 X0. Y0.;

G00 Z100.;

G98 G76 X0. Y0. Z-20. R10. P1000 Q5. K1 F100.; ---------- (1)

G91 X-10. K3;---------- (2)

Y10. K3; ---------- (3)

G80 G91 G28 X0. Y0. Z0.;

M05;

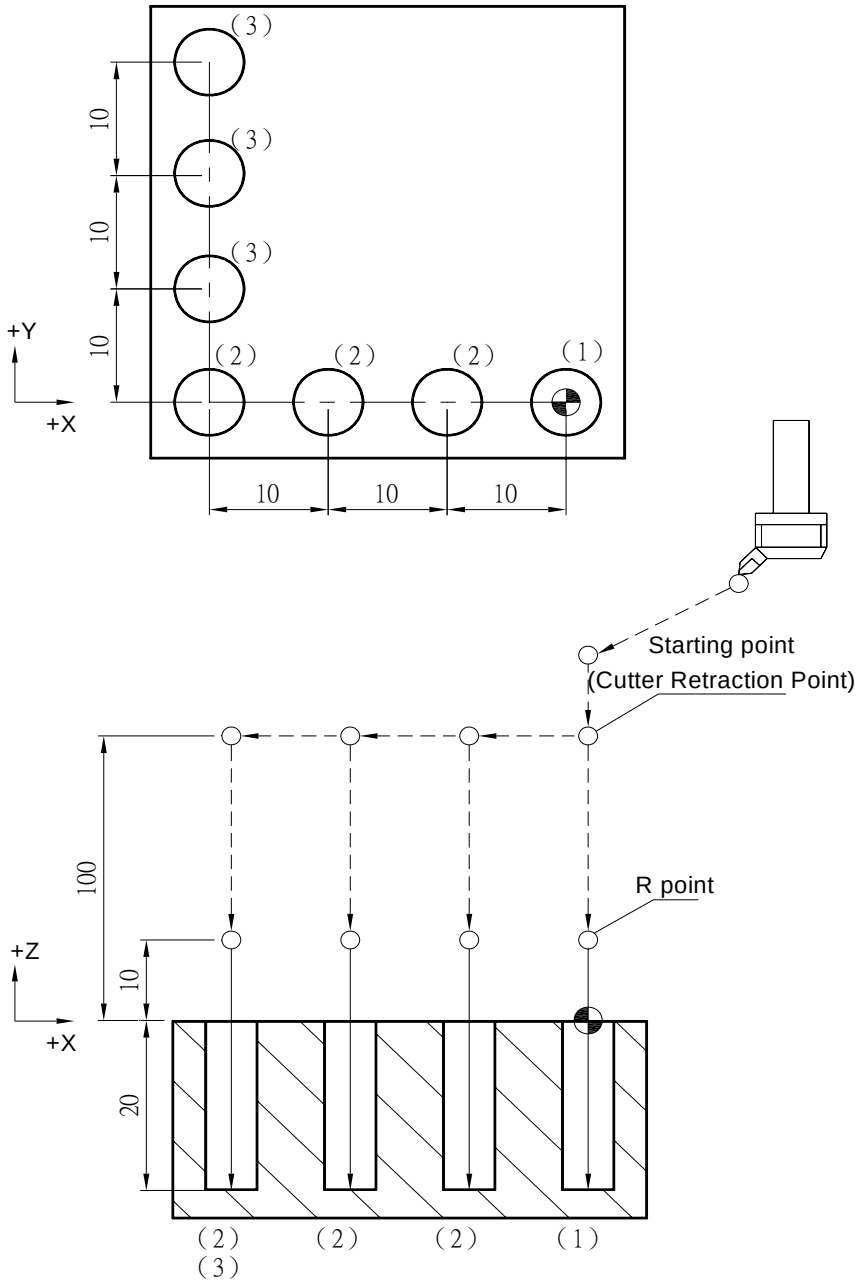

```
M03 S1000;
G17 G90 G00 G54 X0. Y0.;
G00 Z100.;
G99 G76 X0. Y0. Z-20. R10. P1000 Q5. K1 F100.; ---------- (1)
X-10. Z-30.; ---------- (2)
X20.   Z-40.; ---------- (3)
G80 G91 G28 X0. Y0. Z0.;
M05;
```

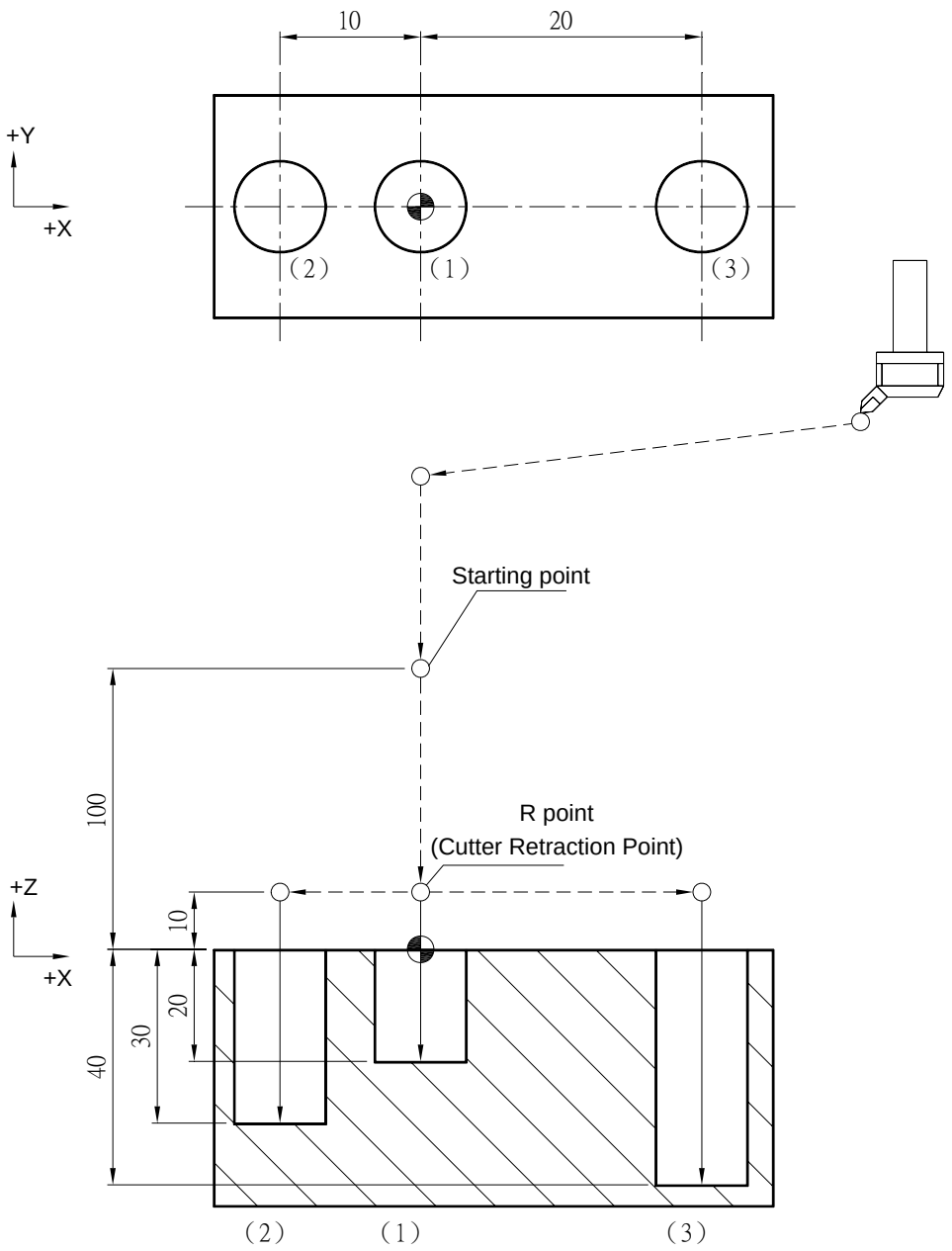

M03 S1000;

G17 G90 G00 G54 X0. Y0.;

G00 Z100.;

G98 G76 X0. Y0. Z-20. R10. P1000 Q5. K1 F100.; ---------- (1)

X-10. Z-30.; ---------- (2)

X20. Z-40.; ---------- (3)

G80 G91 G28 X0. Y0. Z0.;

M05;

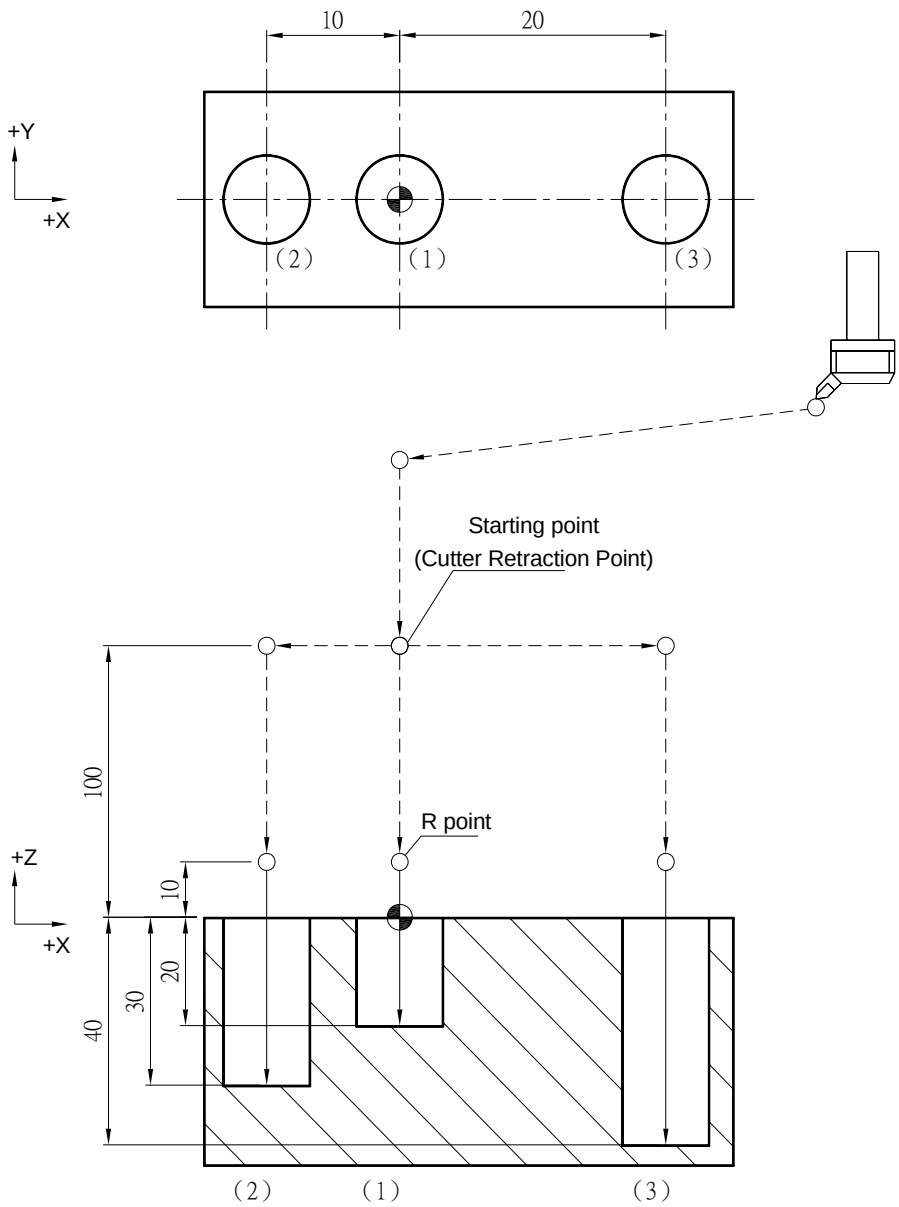

G80 Fixed Canned Cycle Cutting Mode Cancel

Command Format

```
G80;
```

Argument Instruction

This command is to cancel the fixed canned cycle cutting mode of G73, G74, G76, G81~G89.

Besides G80, movement commands G00, G01, G02 and G03 can also be used to cancel fixed canned cycle cutting mode.

Program Sample

```
G17 G90 G00 G54 X0. Y0.;
Z100.;
G99 G73 X0. Y0. Z-20. R10. Q4. K1 F100.;
G80; ---------- (G73 cycle cancel)

G17 G90 G00 G54 X0. Y0.;
Z100.;
G99 G73 X0. Y0. Z-20. R10. Q4. K1 F100.;
G00 Z100.;---------- (G73 cycle cancel)
```

G81 Drilling Cycle

Command Format

```
G81 X__ Y__ Z__ R__ K__ F__;
```

Argument Instruction

- X__Y__

  Coordinate of hole position (mm).

- Z__

  Coordinate of hole bottom (mm).

- R__

  Coordinate of R point (i.e. retraction point) (mm).

- K__

  Times of iteration.

- F__

  Feedrate (G94 mm/min) (G95 mm/rev).

Action Instruction (taking G17 plane for example)

1. Fast position to hole position (X, Y, yet maintain the original height of tool);
2. Fast position to the coordinate of R point (R);
3. Cut to the hole bottom position (Z) with specified cutting feedrate and spindle speed;
4. In G98 mode, fast return to the starting point; In G99 mode, fast return to R point;
5. If K is specified (> 1) , repeat steps 2~4 until reach specified drilling iteration times; otherwise procedure ends;
6. In G91 mode, argument R specifies the distance between R point and the starting point; argument Z specifies the distance between hole bottom position and R point; if K is specified (> 1), after each drilling process (steps 2~5), the hole position will migrate according to specified X, Y and then continue next drilling process.

7. The difference between G81 and G82 is that the latter can specify the dwell time at hole bottom.

Illustration

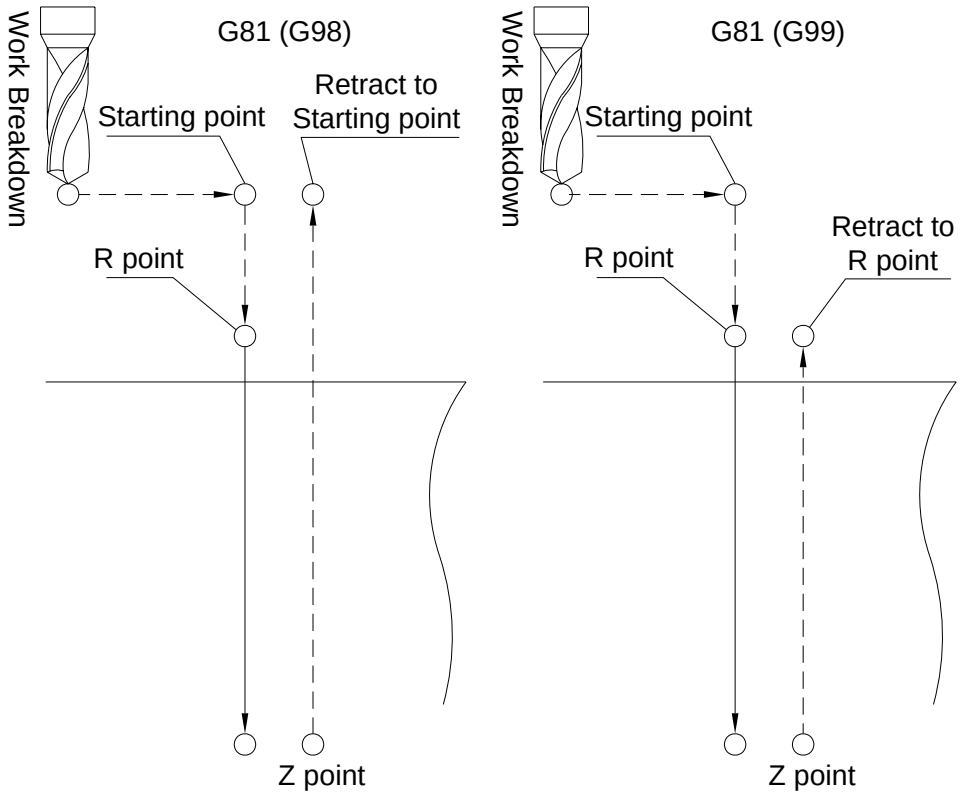

Program Sample

```
M03 S1000;
G17 G90 G00 G54 X0. Y0.;
G00 Z100.;
G99 G81 X0. Y0. Z-30. R10. K1 F100.; ---------- (1)
X-15.;---------- (2)
X-30.;---------- (3)
X-30. Y15.;---------- (4)
G80 G91 G28 X0. Y0. Z0.;
M05;
```

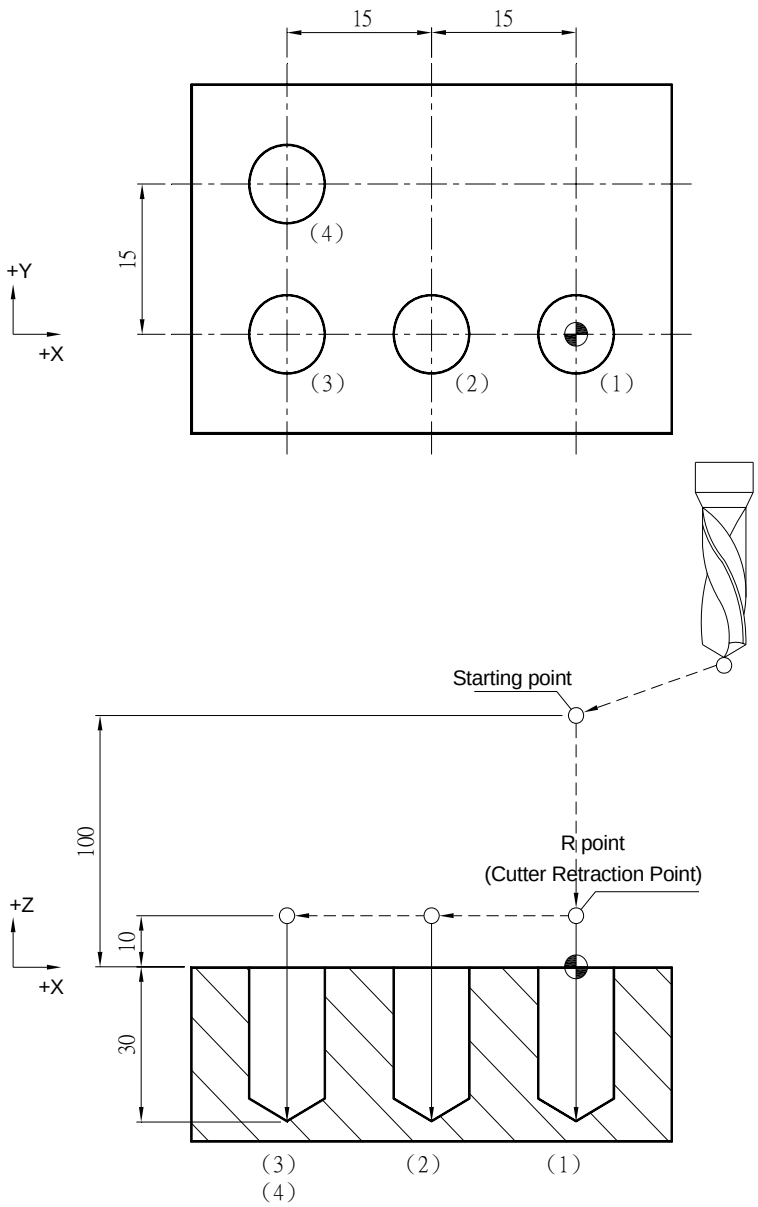

```
M03 S1000;
G17 G90 G00 G54 X0. Y0.;
G00 Z100.
G98 G81 X0. Y0. Z-30. R10. K1 F100.; ---------------------------------------------------------------- (1)
X-15.;---------------------------------------------------------------------------------------------------- (2)
X-30.;---------------------------------------------------------------------------------------------------- (3)
X-30. Y15.;----------------------------------------------------------------------------------------------- (4)
G91 G80 G28 X0. Y0. Z0.;
M05;
```

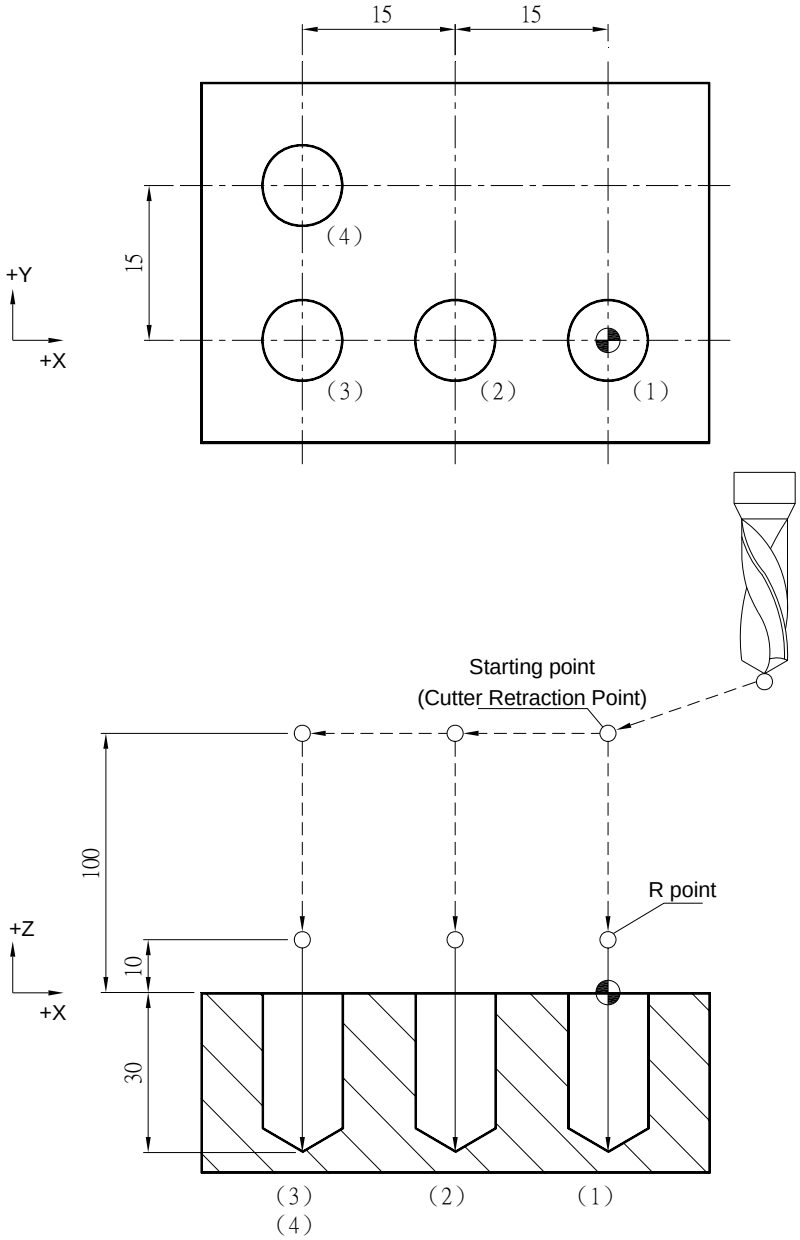

M03 S1000;

G17 G90 G00 G54 X0. Y0.;

G00 Z100.;

G99 G81 X0. Y0. Z-20. R10. K1 F100.; ---------- (1)

G91 X-10. K3;---------- (2)

Y10. K3; ---------- (3)

G91 G80 G28 X0. Y0. Z0.;

M05;

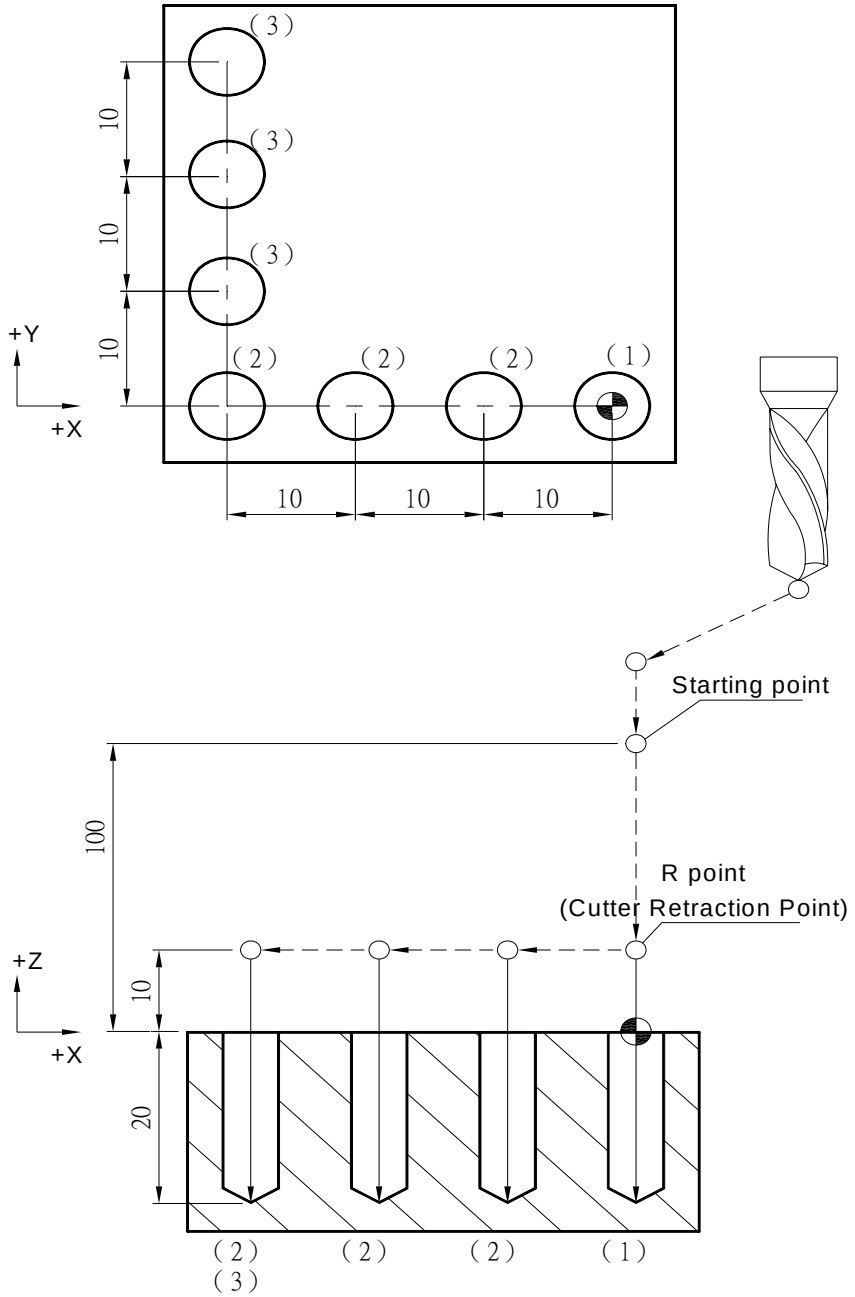

```
M03 S1000;
G17 G90 G00 G54 X0. Y0.;
G00 Z100.;
G98 G81 X0. Y0. Z-20. R10. K1 F100.; ---------- (1)
G91 X-10. K3;---------- (2)
Y10.   K3; ---------- (3)
G91 G80 G28 X0. Y0. Z0.;
M05;
```

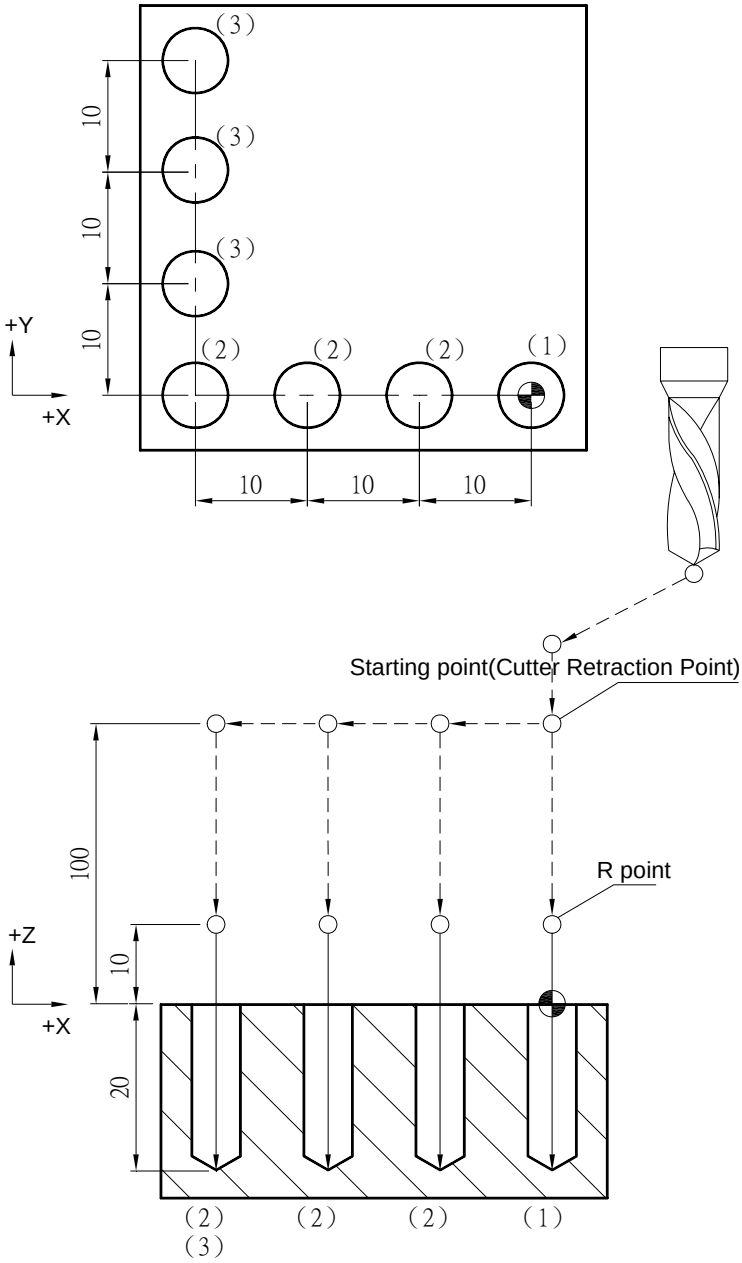

M03 S1000;

G17 G90 G00 G54 X0. Y0.;

G00 Z100.;

G99 G81 X0. Y0. Z-20. R10. K1 F100.; ---------- (1)

X-10. Z-30.; ---------- (2)

X20. Z-40.; ---------- (3)

G80 G91 G28 X0. Y0. Z0.;

M05;

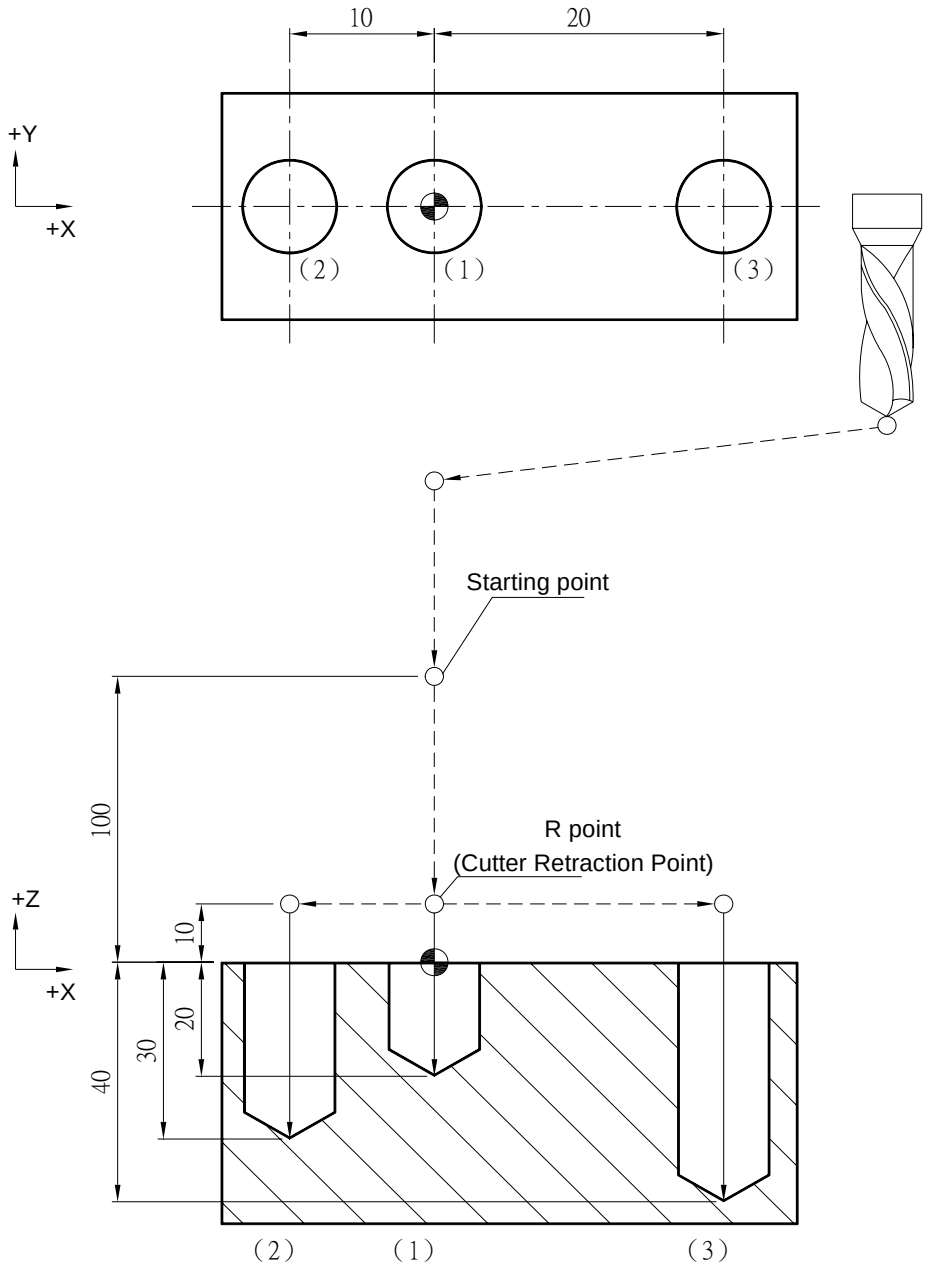

M03 S1000;

G17 G90 G00 G54 X0. Y0.;

G00 Z100.;

G98 G81 X0. Y0. Z-20. R10. K1 F100.; ---------- (1)

X-10. Z-30.; ---------- (2)

X20. Z-40.; ---------- (3)

G91 G80 G28 X0. Y0. Z0.;

M05;

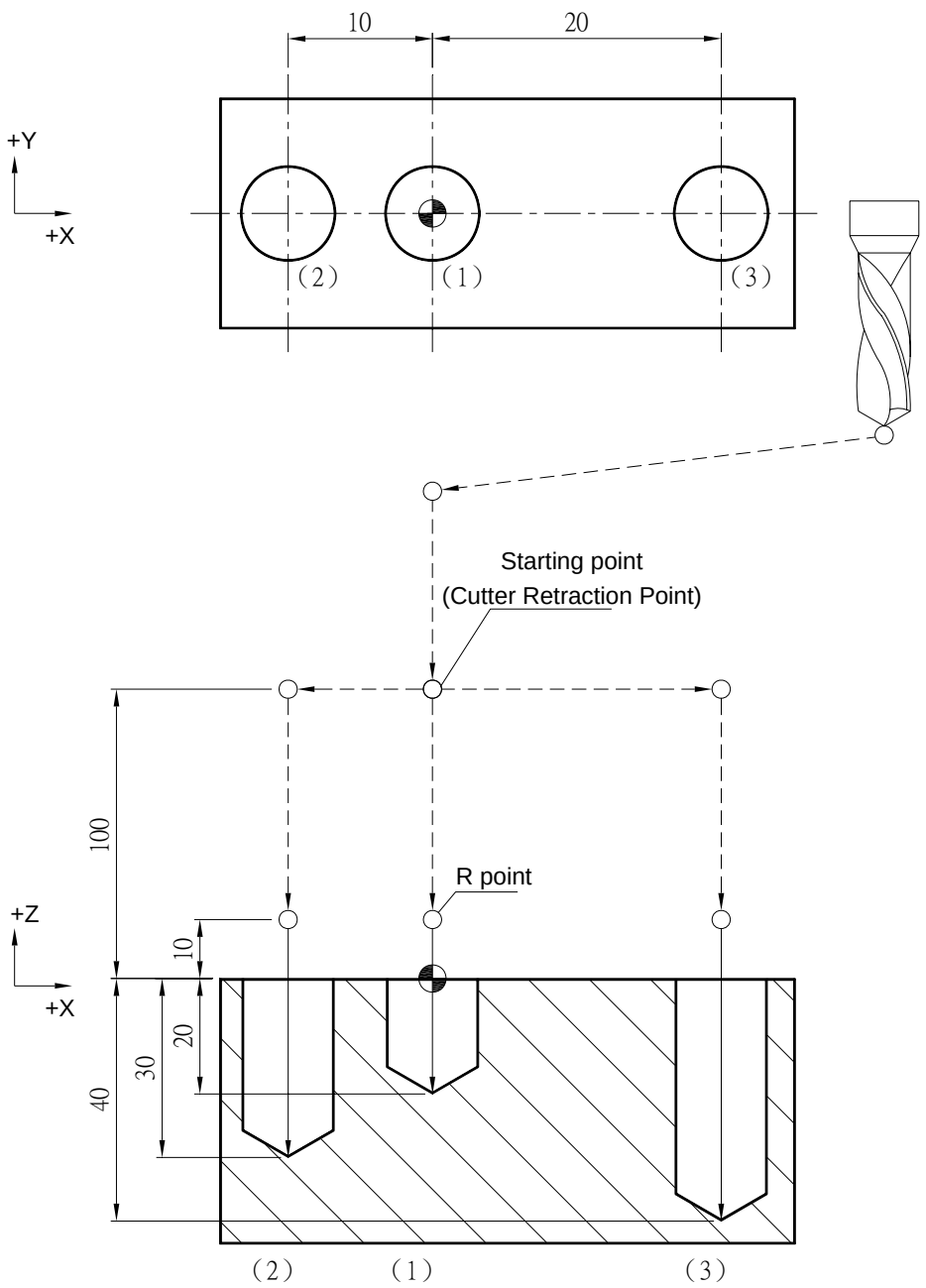

G82 Drilling Cycle

Command Format

```
G82 X__ Y__ Z__ R__ P__ K__ F__;
```

Argument Instruction

- X__Y__

  Coordinate of hole position (mm).

- Z__

  Coordinate of hole bottom (mm).

- R__

  Coordinate of R point (i.e. retraction point) (mm).

- P__

  Pause time of the hole bottom (1/1000 sec), minimum unit, decimal timess are not allowed.

- K__

  Times of iteration.

- F__

  Cutting feedrate (G94 mm/min) (G95 mm/rev)

Action Instruction (taking G17 plane for example)

1. Fast position to hole position (X, Y, yet maintain the original tool height);
2. Fast position to the coordinate of R point (R);
3. Cut to the hole bottom position (Z) with specified cutting feedrate and rotation speed of spindle;
4. If P is specified,dwell at the hole bottom for specified time;

5. In 98 mode, fast return to the starting point; In G99 mode, fast return to R point;

6. If K is specified (> 1), repeat steps 2~5 until reach specified drilling iteration times; otherwise procedure ends;

7. In G91 mode, argument R specifies the distance between R point and the starting point; argument Z specifies the distance between hole bottom position and the R point; If K is specified (> 1), after each drilling process (steps 2~5) the hole will migrate according to specified X, Y and then continues next drilling process.

8. The difference between G81 and G82 is that the latter can specify the dwell time at the hole bottom.

Illustration

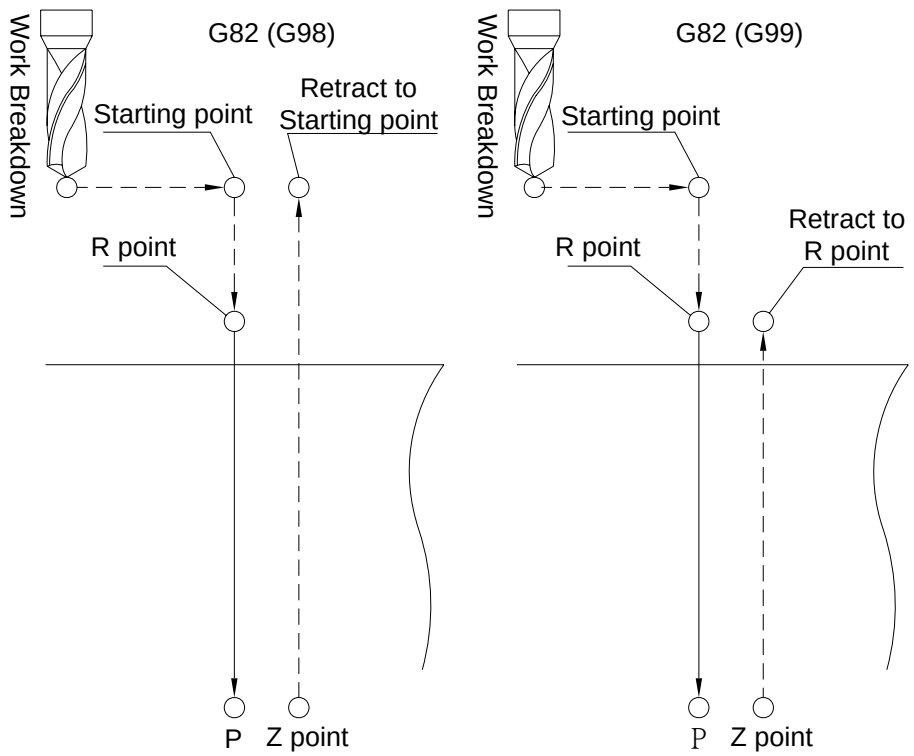

Program Sample

```
M03 S1000;
G17 G90 G00 G54 X0. Y0.;
G00 Z100.;
G99 G82 X0. Y0. Z-30. R10. P1000 K1 F100.; ---------- (1)
X-15.;---------- (2)
X-30.;---------- (3)
X-30. Y15.;---------- (4)
G80 G91 G28 X0. Y0. Z0.;
M05;
```

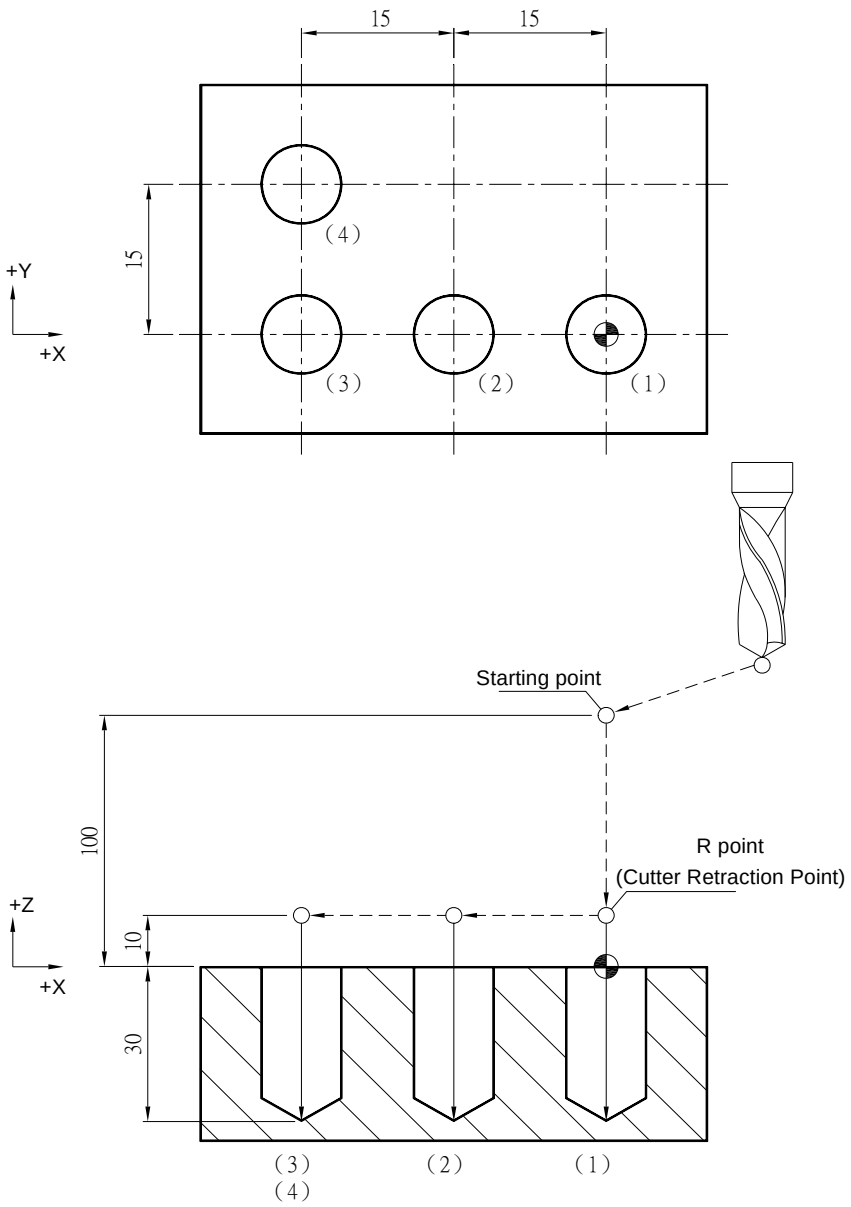

```
M03 S1000;
G17 G90 G00 G54 X0. Y0.;
G00 Z100.;
G98 G82 X0. Y0. Z-30. R10. P1000 K1 F100.; ---------- (1)
X-15.;---------- (2)
X-30.;---------- (3)
X-30. Y15.;---------- (4)
G80 G91 G28 X0. Y0. Z0.;
M05;
```

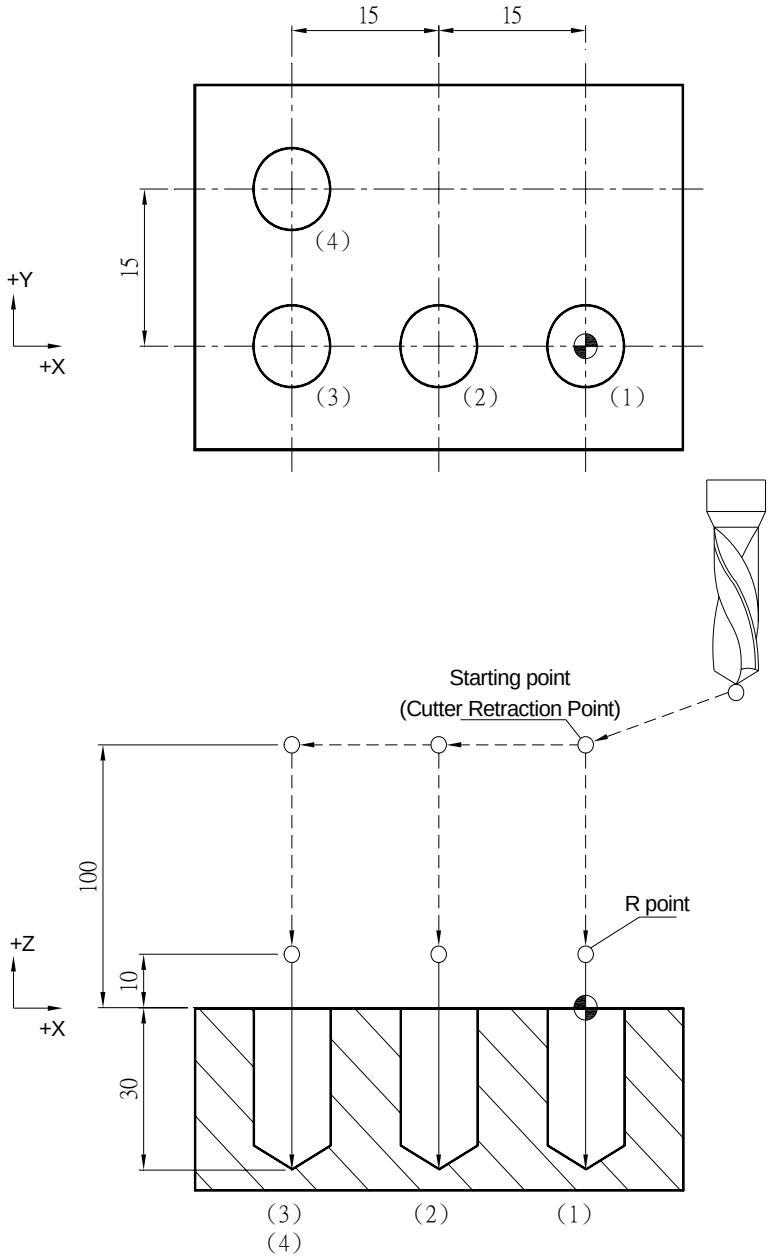

```
M03 S1000;
G17 G90 G00 G54 X0. Y0.;
G00 Z100.;
G99 G82 X0. Y0. Z-20. R10. P1000 K1 F100.; ---------- (1)
G91 X-5. K3;---------- (2)
Y5.   K3;---------- (3)
G91 G80 G28 X0. Y0. Z0.;
M05;
```

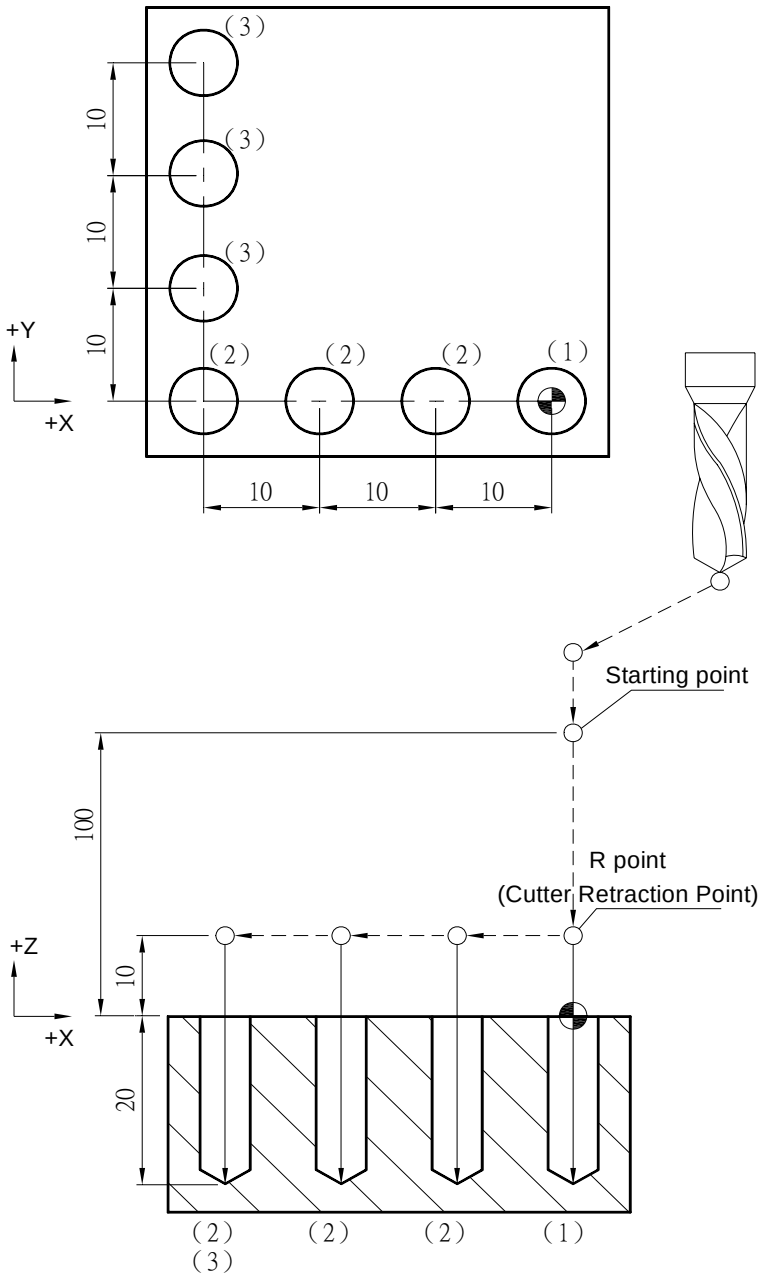

```
M03 S1000;
G17 G90 G00 G54 X0. Y0.;
G00 Z100.;
G98 G82 X0. Y0. Z-20. R10. P1000 K1 F100.; ---------- (1)
G91 X-10. K3; ---------- (2)
Y10.   K3; ---------- (3)
G91 G80 G28 X0. Y0. Z0.;
M05;
```

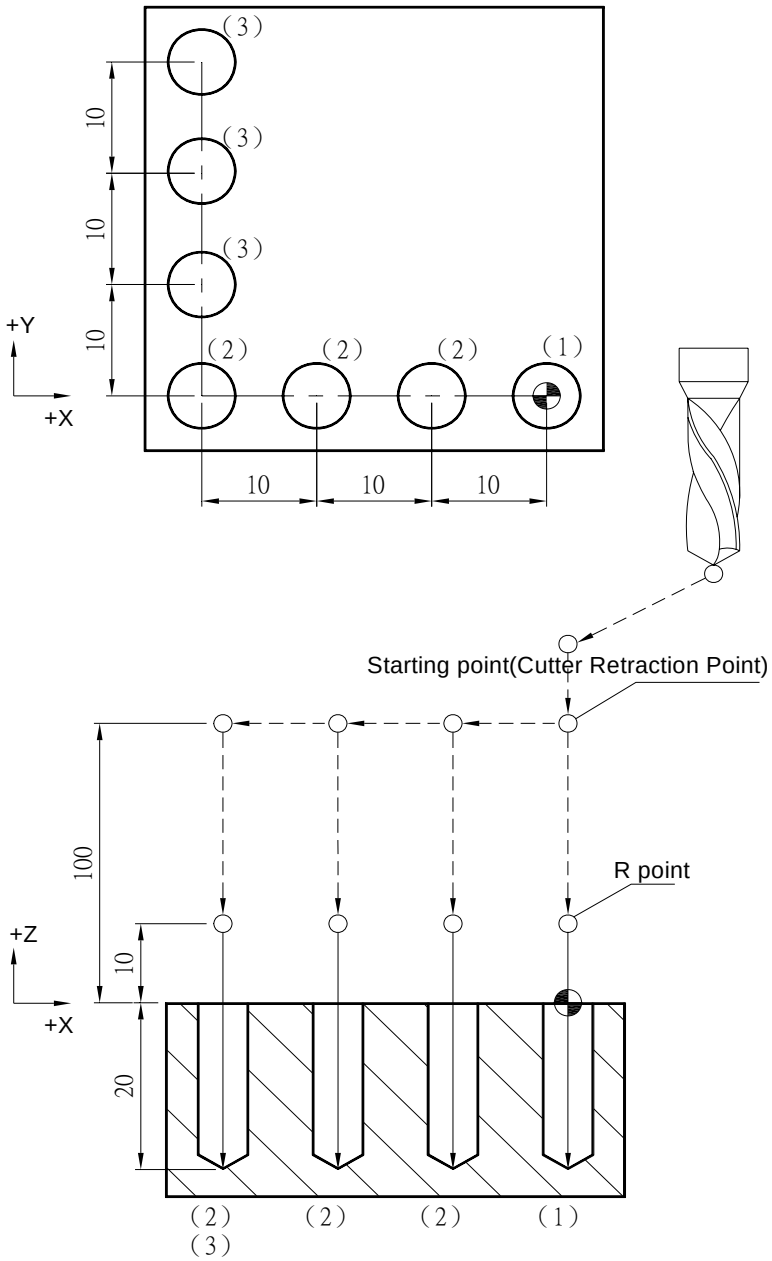

M03 S1000;

G17 G90 G00 G54 X0. Y0.;

G00 Z100.;

G99 G82 X0. Y0. Z-20. R10. P1000 K1 F100.; ---------- (1)

X-10. Z-30.; ---------- (2)

X20. Z-40.; ---------- (3)

G80 G91 G28 X0. Y0. Z0;.

M05;

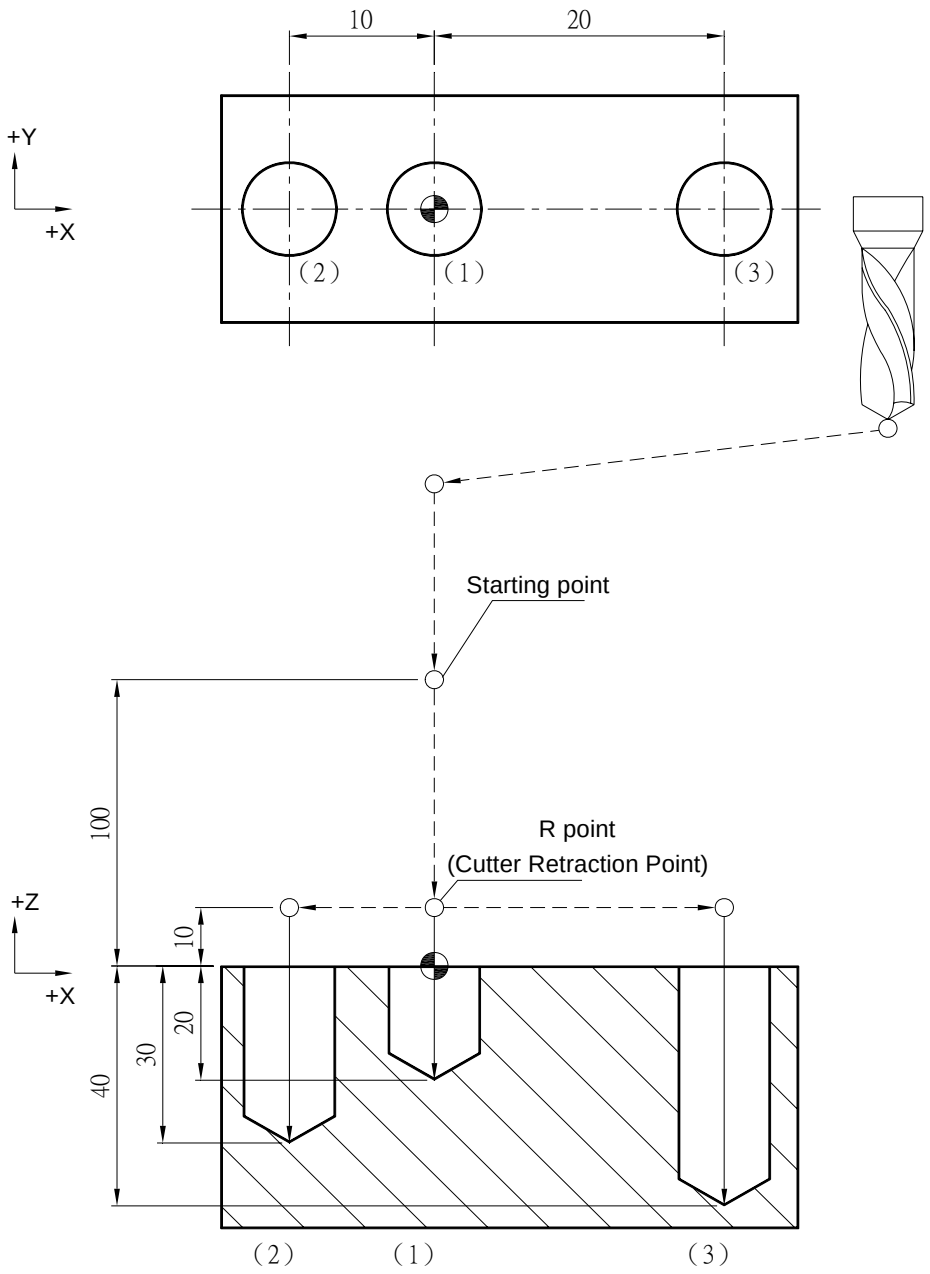

```
M03 S1000;
G17 G90 G00 G54 X0. Y0.;
G00 Z100.;
G98 G82 X0. Y0. Z-20. R10. P1000 K1 F100.; ---------- (1)
X-10. Z-30.; ---------- (2)
X20.   Z-40.; ---------- (3)
G80 G91 G28 X0. Y0. Z0.;
M05;
```

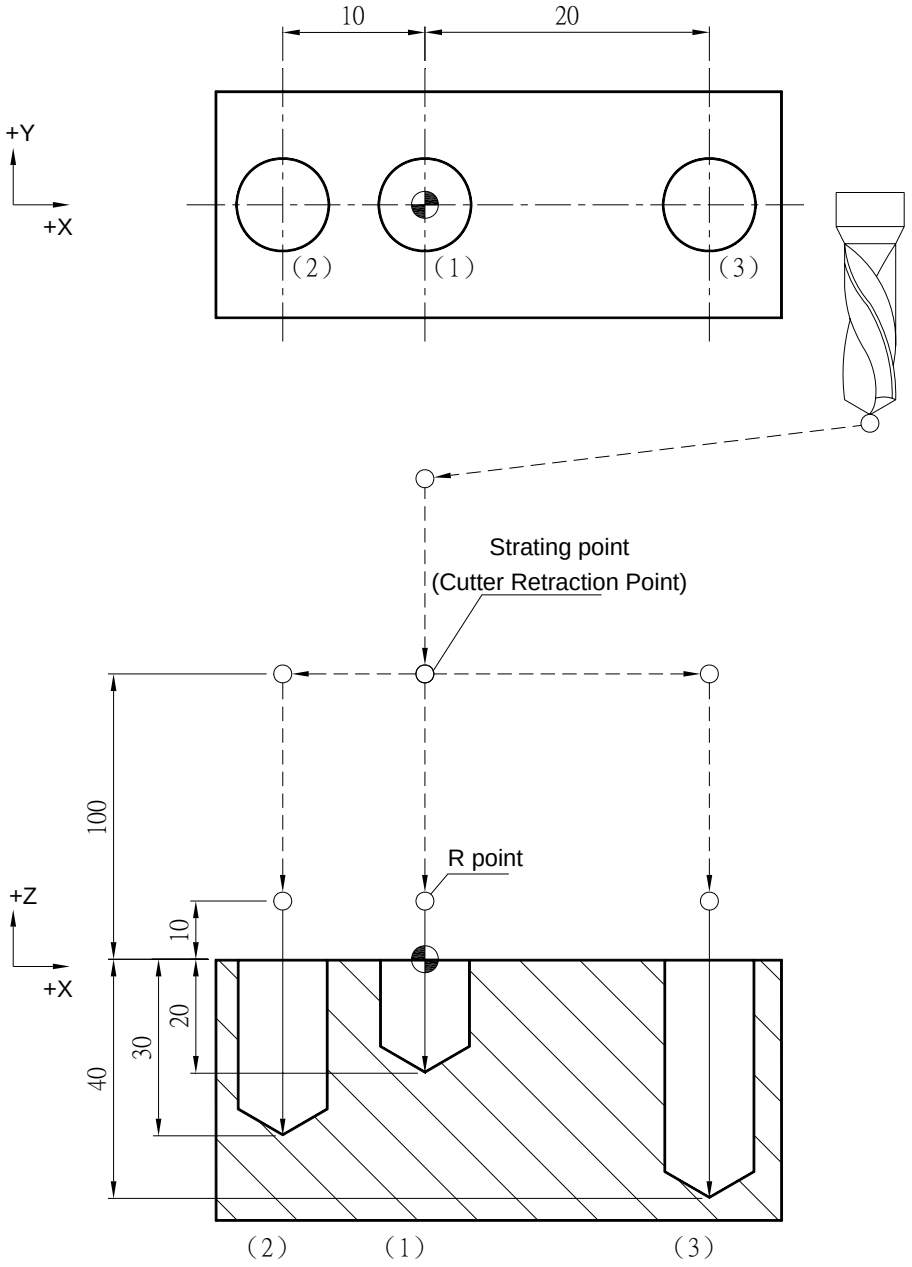

G83 Peck Drilling Cycle

Command Format

```
G83 X__ Y__ Z__ R__ Q__ K__ F__;
```

Argument Instruction

- X__Y__

  Coordinate of hole position (mm).

- Z__

  Coordinate of hole bottom (mm).

- R__

  Coordinate of R point (i.e. retraction point) (mm).

- Q__

  Cutting feed per time (mm).

- K__

  Times of iteration.

- F__

  Feedrate (G94 mm/min) (G95 mm/rev).

Action Instruction (taking G17 plane for example)

1. Fast position to hole position (X, Y, yet maintain original tool height);
2. Fast position to the coordinate of R point (R);
3. Peck drill for a feed according to specified cutting feedrate and spindle speed;
4. Fast return to R point;
5. Fast position to a certain height away from the last manufacturing point, the height is set by parameter #0150;
6. Cutting feed (peck drill feed + parameter #0150 setting value);
7. Fast return to R point；
8. Repeat steps 5~7 until cutting to the hole bottom;
9. In G98 mode, fast return to the starting point; In G99 mode, fast return to R point;

10. If K is specified (> 1), repeat steps 2~9 until obtaining specified drilling repetion times; otherwise procedure ends;
11. In G91 mode, argument R specifies the distance between R point and the starting point; argument Z specifies the distance between hole bottom position and R point; if K is specified (> 1), after each drilling process (steps 2~9) the hole position will migrate according to specified X, Y and then continue next drilling process
12. The difference between G73 and G83 is that the retraction amount of the former is set by system parameter #0150，and the latter will return to R point everytime.

Illustration

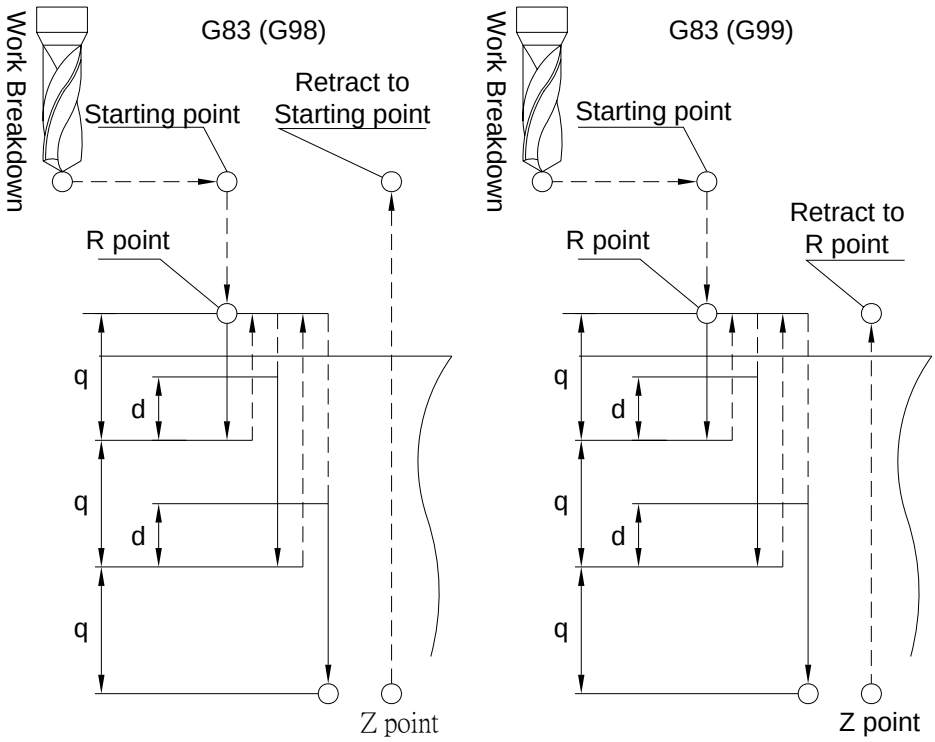

Program Sample

```
M03 S1000;
G17 G90 G00 G54 X0. Y0.;
G00 Z100.;
G99 G83 X0. Y0. Z-30. R10. Q4 K1 F100.;---------- (1)
X-15.;---------- (2)
X-30.;---------- (3)
X-30. Y15.;---------- (4)
G80 G91 G28 X0. Y0. Z0.;
M05;
```

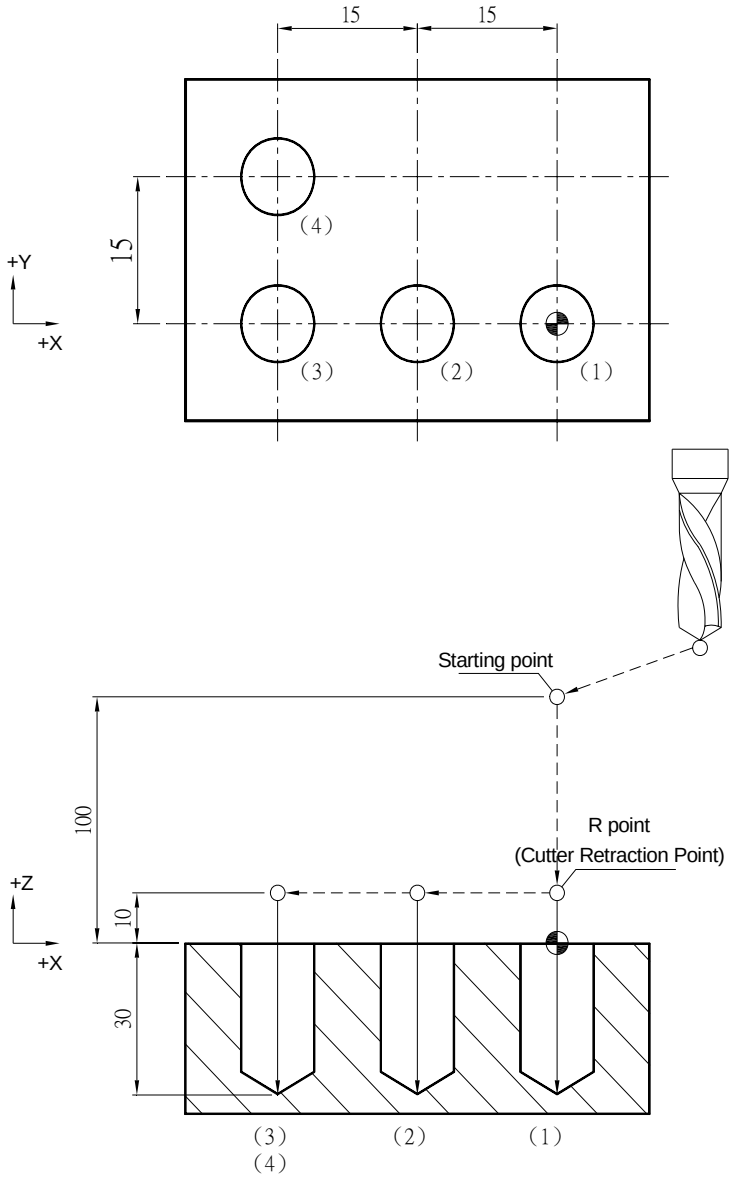

```
M03 S1000;
G17 G90 G00 G54 X0. Y0.;
G00 Z100.;
G98 G83 X0. Y0. Z-30. R10. Q4 K1 F100.;---------------------------------------------------------------- (1)
X-15.;------------------------------------------------------------------------------------------------- (2)
X-30.;------------------------------------------------------------------------------------------------- (3)
X-30. Y15.;-------------------------------------------------------------------------------------------- (4)
G80 G91 G28 X0. Y0. Z0.;
M05;
```

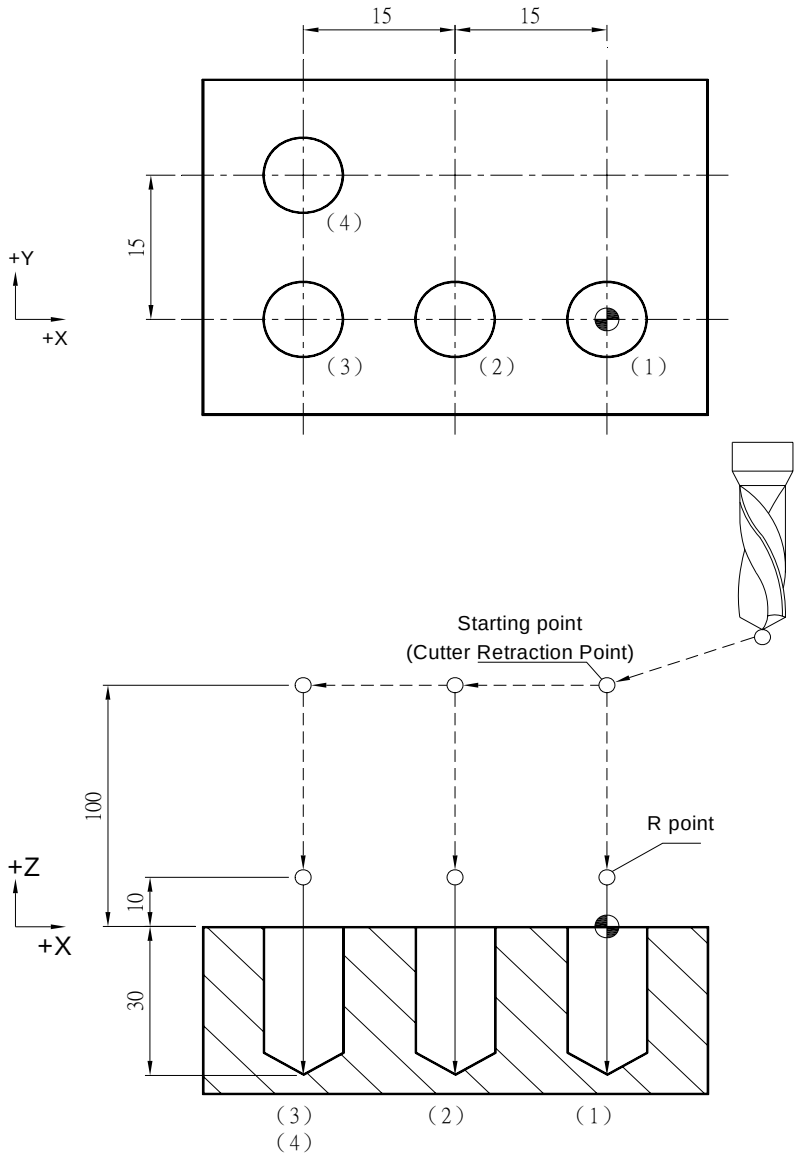

```
M03 S1000;
G17 G90 G00 G54 X0. Y0.;
G00 Z100.;
G99 G83 X0. Y0. Z-20. R10. Q4 K1 F100.;---------- (1)
G91 X-10. K3;---------- (2)
Y10.   K3; ---------- (3)
G80 G91 G28 X0. Y0. Z0.;
M05;
```

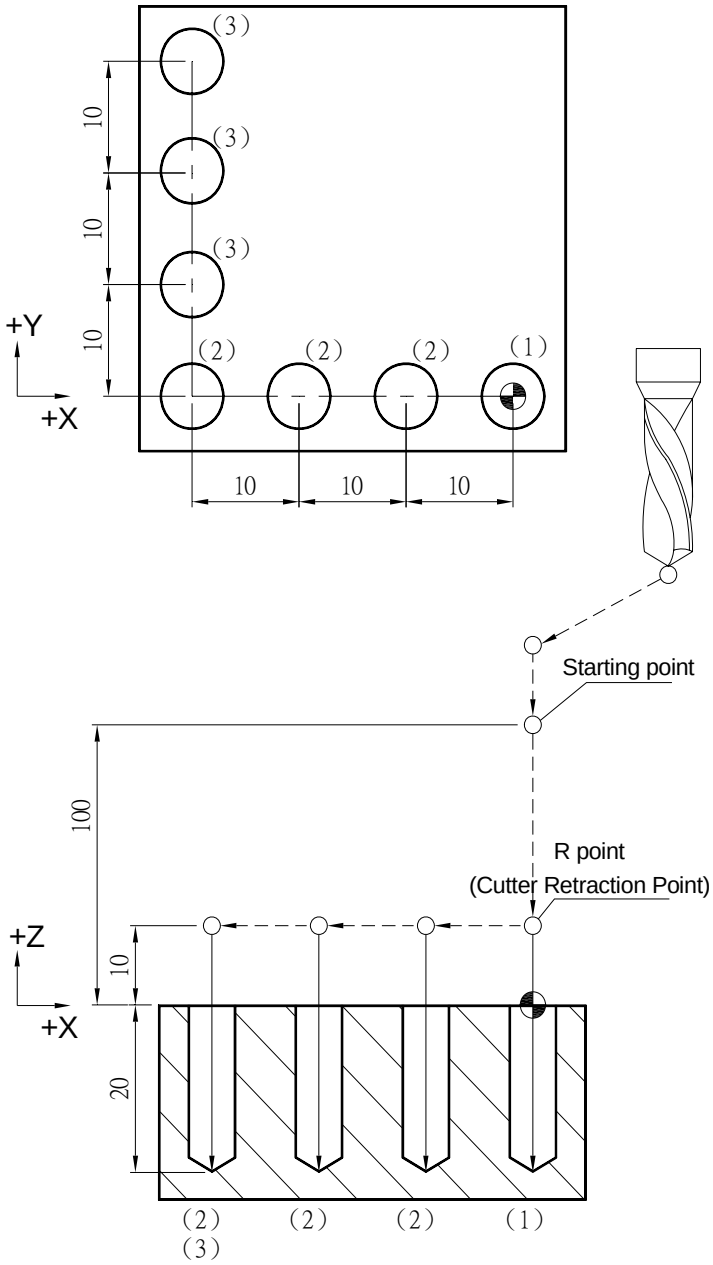

```
M03 S1000;
G17 G90 G00 G54 X0. Y0.;
G00 Z100.;
G98 G83 X0. Y0. Z-20. R10. Q4 K1 F100.;---------------------------------------------------------------- (1)
G91 X-10. K3;------------------------------------------------------------------------------------------- (2)
Y10.   K3; ---------------------------------------------------------------------------------------------- (3)
G80 G91 G28 X0. Y0. Z0.;
M05;
```

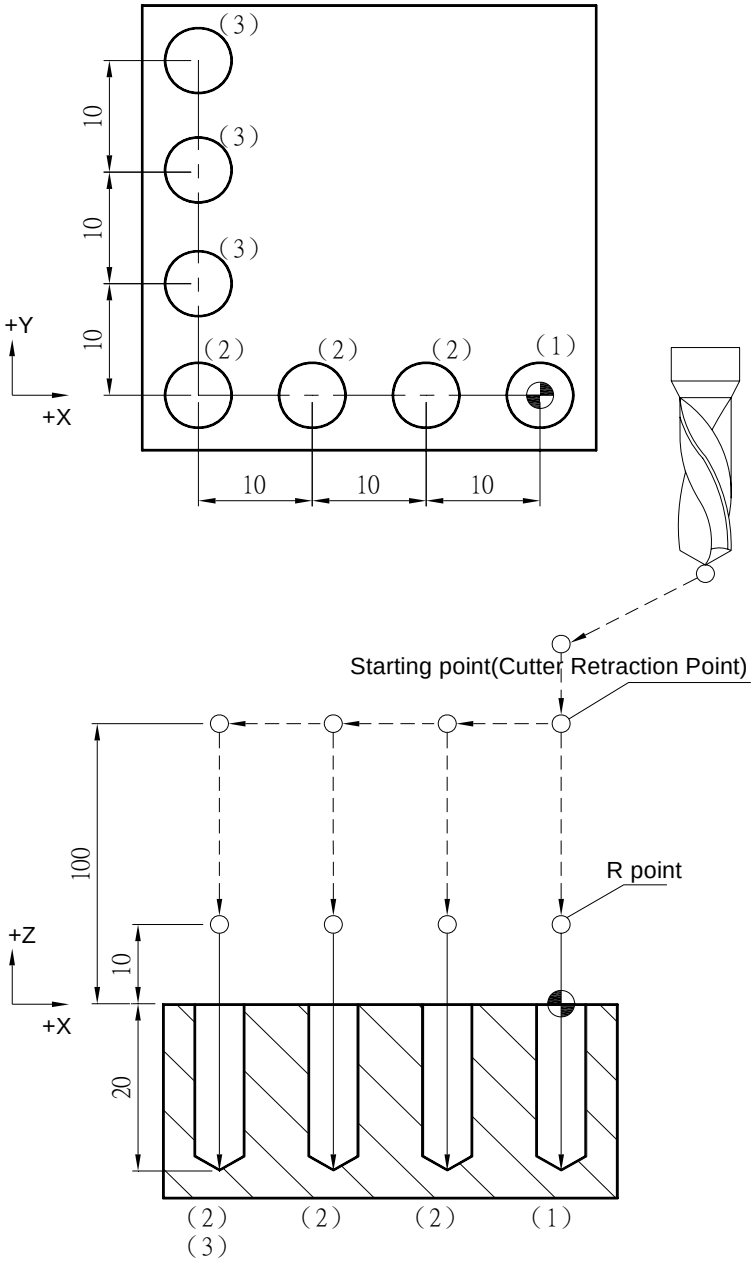

G83 Peck Drilling Cycle

```
M03 S1000;
G17 G90 G00 G54 X0. Y0.;
G00 Z100.;
G99 G83 X0. Y0. Z-20. R10. Q4 K1 F100.;---------- (1)
X-10. Z-30.;---------- (2)
X20. Z-40.;---------- (3)
G80 G91 G28 X0. Y0. Z0.;
M05;
```

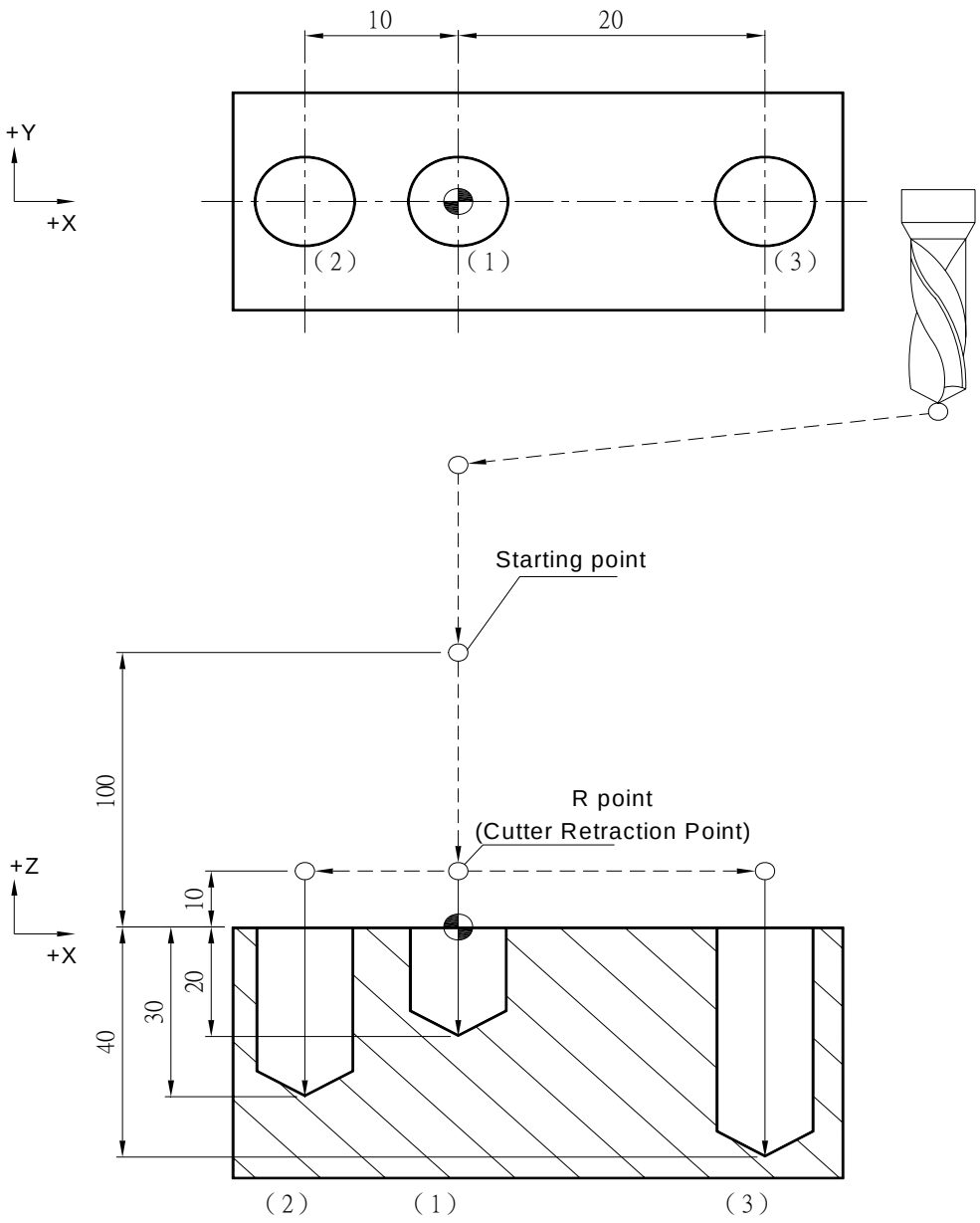

```
M03 S1000;
G17 G90 G00 G54 X0. Y0.;
G00 Z100.;
G98 G83 X0. Y0. Z-20. R10. Q4 K1 F100.;---------------------------------------------------------------- (1)
X-10. Z-30.;------------------------------------------------------------------------------------------------ (2)
X20.   Z-40.;----------------------------------------------------------------------------------------------- (3)
G80 G91 G28 X0. Y0. Z0.;
M05;
```

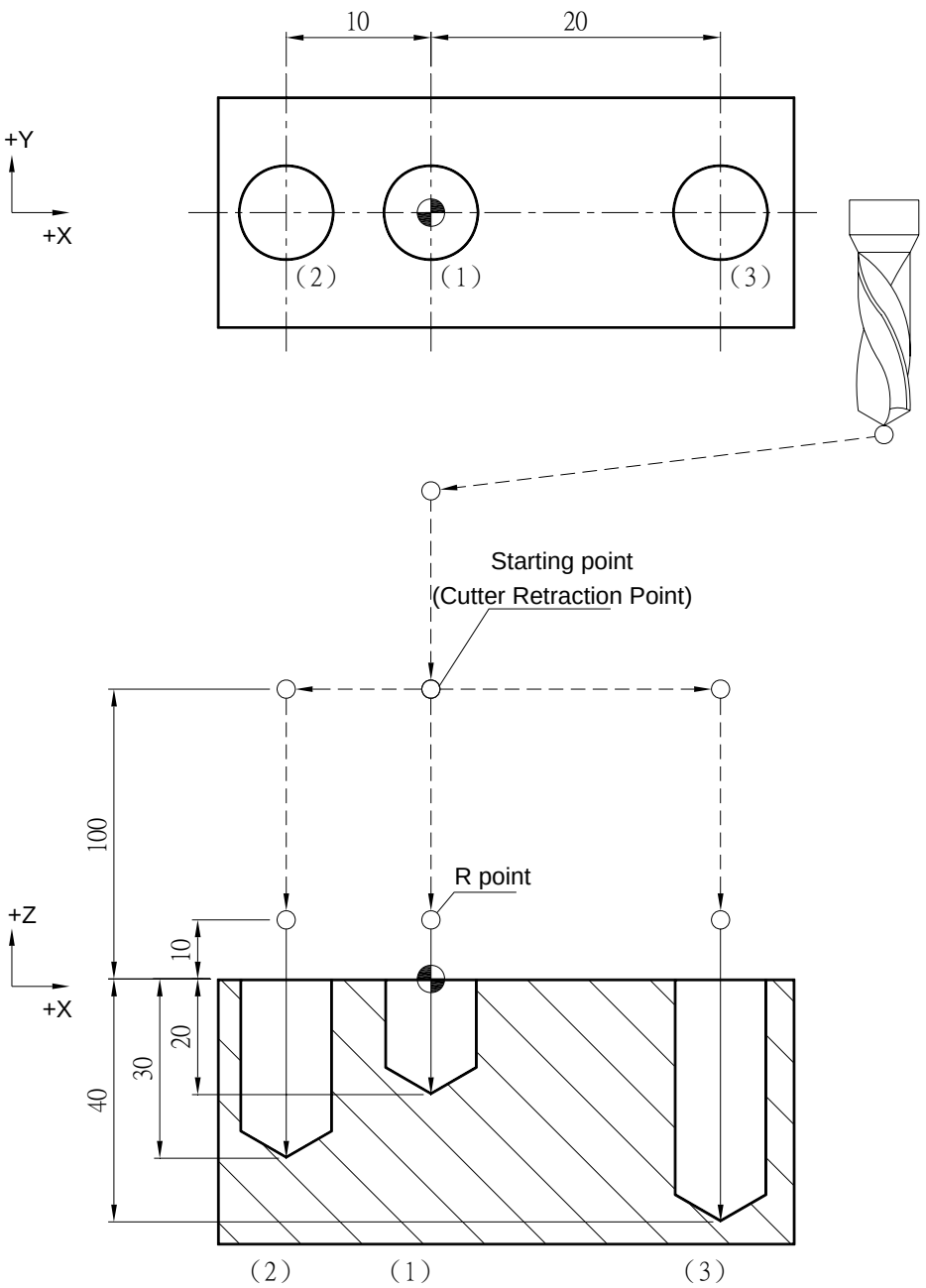

G84 Right-Handed Screw Thread Tapping Cycle

Command Format

```
G84 X__ Y__ Z__ R__ P__ K__ F__;
```

Argument Instruction

- X__Y__

  Coordinate of hole position (mm).

- Z__

  Coordinate of hole bottom (mm).

- R__

  Coordinate of R point (i.e. retraction point) (mm).

- P__

  Dwell time at hole bottom (1/1000 sec), minimum unit, and decimal timess are not allowed.

- K__

  Times of iteration.

- F__

  Cutting feedrate (G94 mm/min) (G95 mm/rev).

If the M29 command is added before G84, it will become right-handed thread rigid tapping cycle.

Action Instruction (taking G17 plane for example)

1. Fast position to hole position (X, Y, yet main tain original tool height);
2. Fast position to the coordinate of R point (R);
3. Tapping begins, spindle rotates clockwisely.
4. Cut to the hole bottom position (Z) with specified cutting feedrate and rotation speed of spindle;
5. Spindle stops; if P is specified, dwell at the hole bottom for specified time;
6. Spindle rotates reversely, cut to R point with specified cutting feedrate and spindle rotation spoeed;

7. Tapping ends, spindle stops; If P is specified, dwell at R point for specified time;
8. In G98 mode, fast return to the starting point; In G99 mode, fast return to R point;
9. If K is specified (> 1), repeat steps 2~8 until obtaining specified drilling repetition times; otherwise procedure ends;
10. In G91 mode, argument R specifies the distance between R point and the starting point; argument Z specifies the distance between hole bottom position and R point; if K is specified (> 1), after each tapping process, the hole will do incremental offset according to specified X, Y and then continue next tapping process.
11. In G94 mode, cutting feedrate (F) is "rotation speed (S) × thread pitch (PITCH)"; In G95 mode, cutting feedrate (F) is "thread pitch (PITCH)".

Illustration

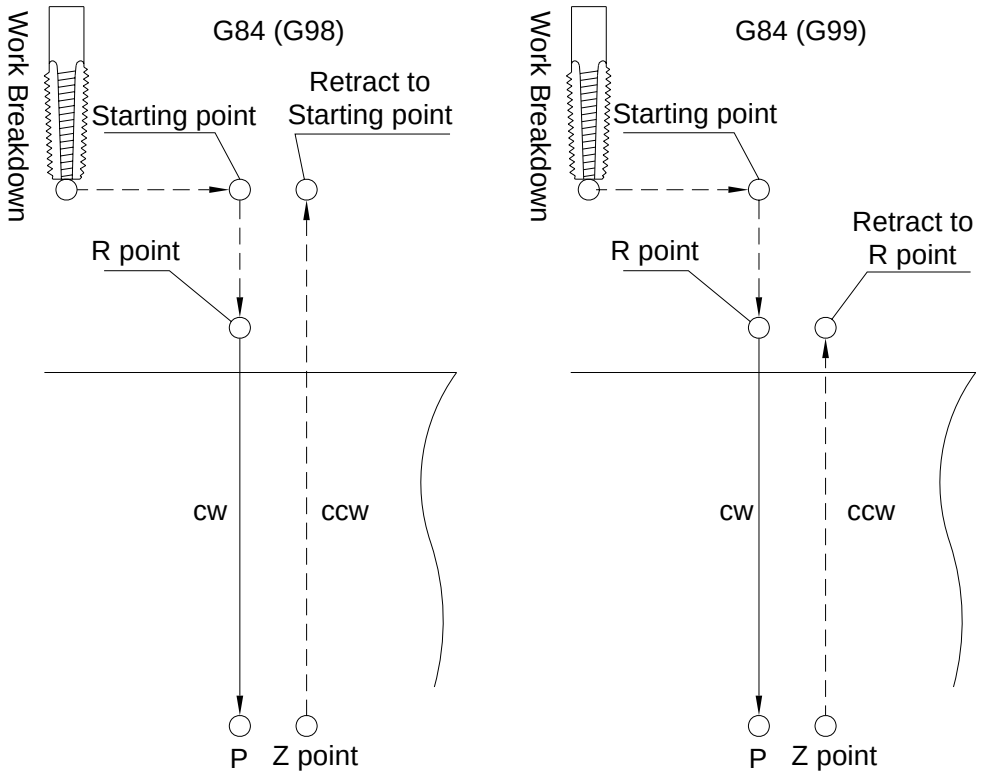

G84 Right-Handed Screw Thread Tapping Cycle

Program Sample

```
G17 G90 G00 G54 X0. Y0.;
G00 Z100.;
M29 S1000;
G99 G84 X0. Y0. Z-30. R10. P1000 K1 F1000.; ---------- (1)
X-15.;---------- (2)
X-30.;---------- (3)
X-30. Y15.;---------- (4)
M28;
G80 G91 G28 X0. Y0. Z0.;
```

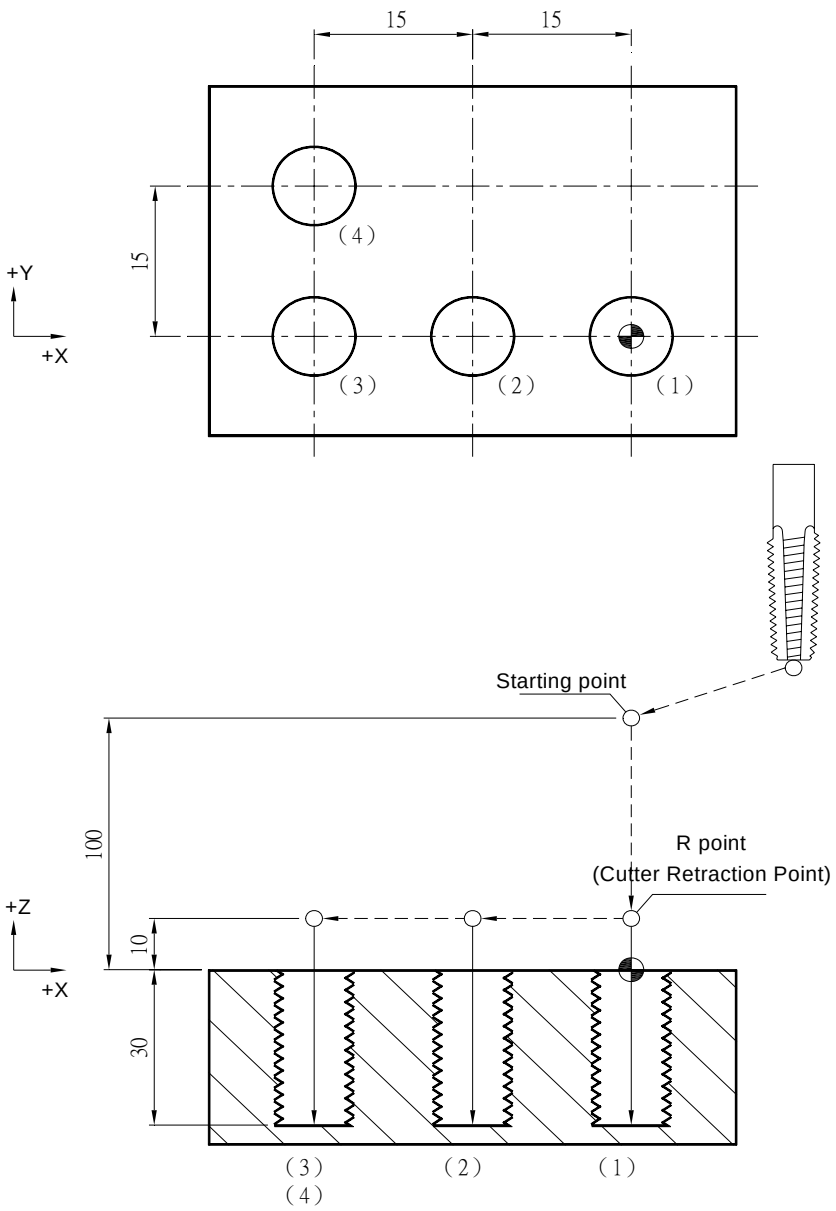

G17 G90 G00 G54 X0. Y0.;

G00 Z100.;

M29 S1000;

G98 G84 X0. Y0. Z-30. R10. P1000 K1 F1000.; ---------- (1)

X-15.;---------- (2)

X-30.;---------- (3)

X-30. Y15.;---------- (4)

M28;

G80 G91 G28 X0. Y0. Z0.;

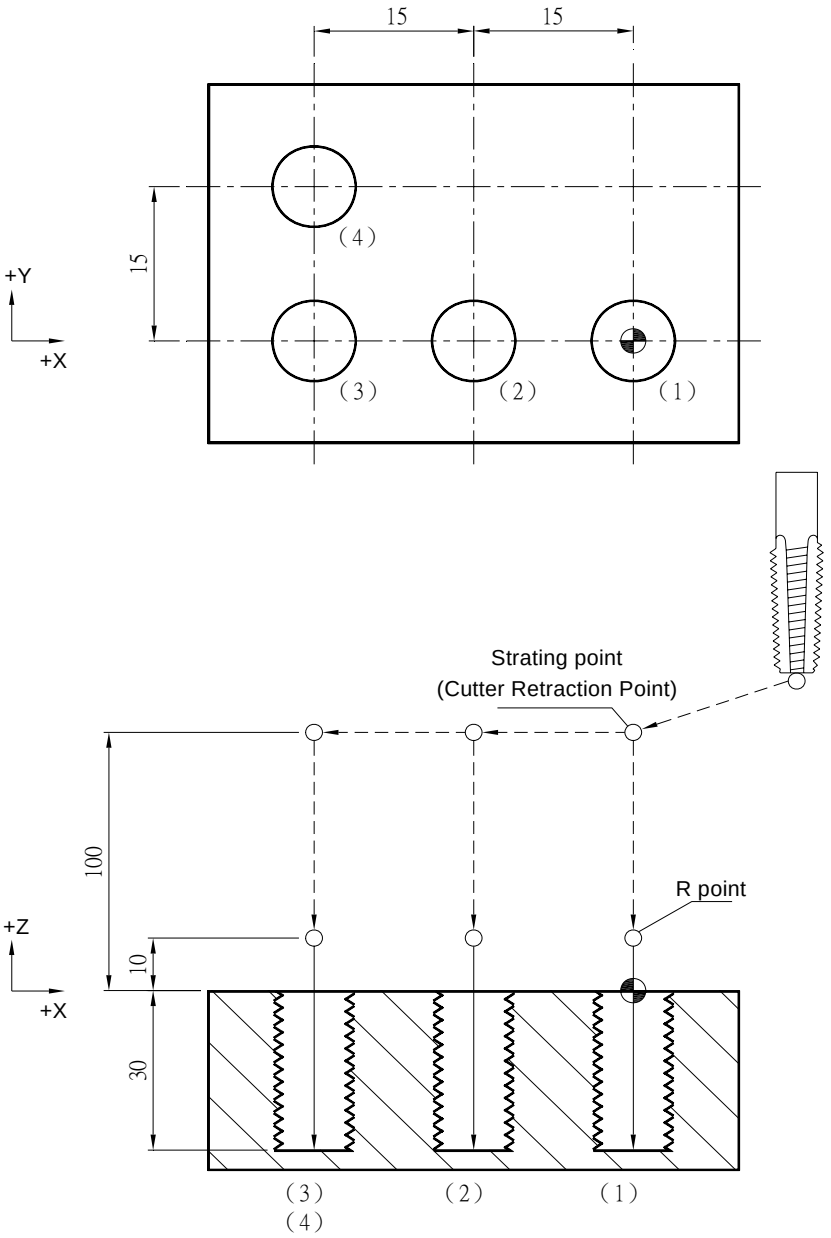

G84 Right-Handed Screw Thread Tapping Cycle

```
G17 G90 G00 G54 X0. Y0.;
G00 Z100.;
M29 S1000;
G99 G84 X0. Y0. Z-20. R10. P1000 K1 F1000.; ---------- (1)
G91 X-10. K3;---------- (2)
Y10.   K3; ---------- (3)
M28;
G80 G91 G28 X0. Y0. Z0.;
```

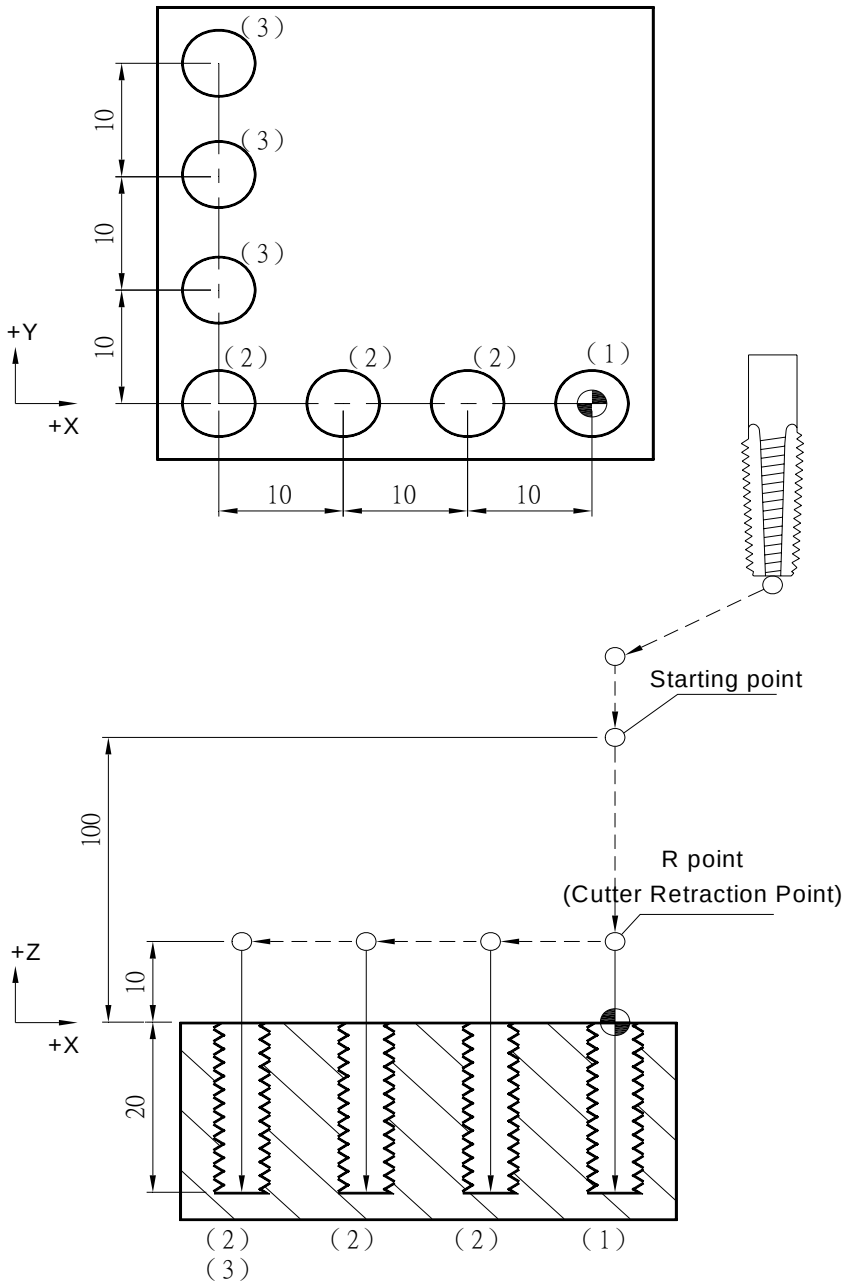

```
G17 G90 G00 G54 X0. Y0.;
G00 Z100.;
M29 S1000;
G98 G84 X0. Y0. Z-20. R10. P1000 K1 F1000.; ---------- (1)
G91 X-10. K3;---------- (2)
Y10.   K3; ---------- (3)
M28;
G80 G91 G28 X0. Y0. Z0.;
```

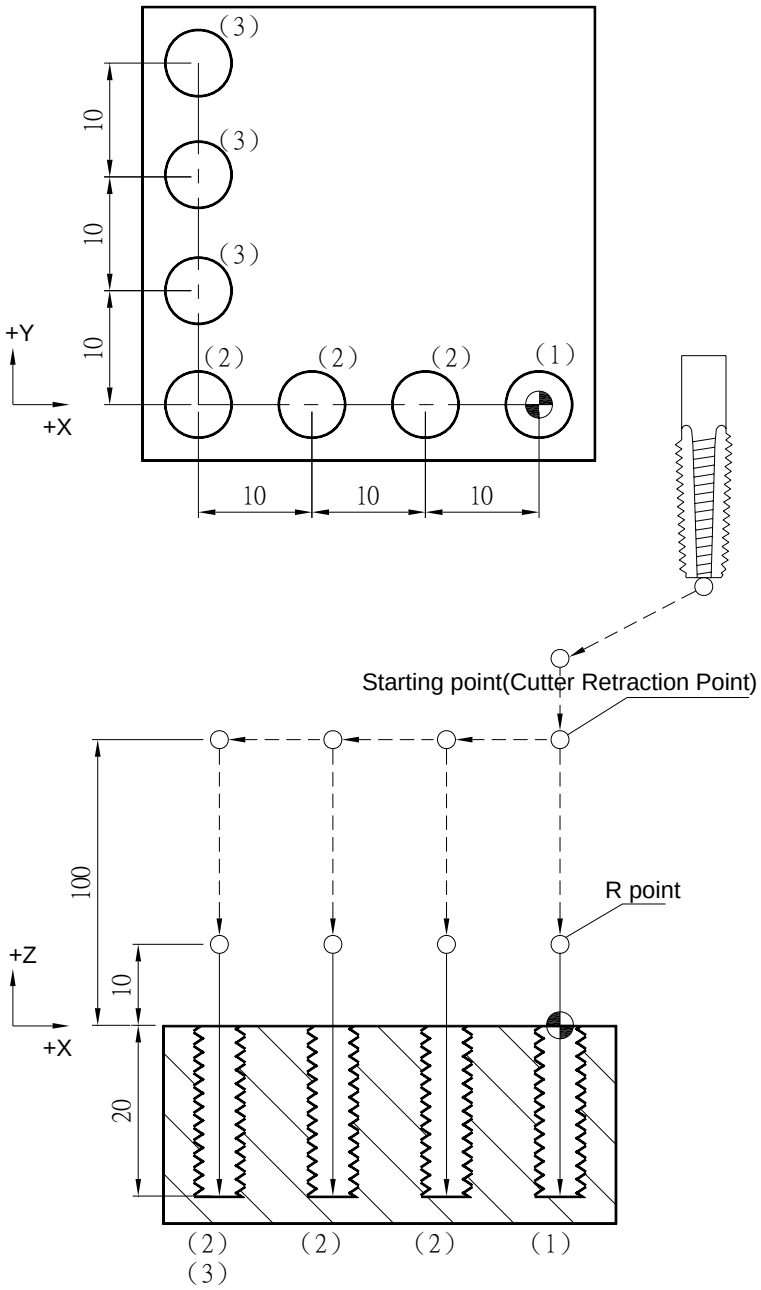

G84 Right-Handed Screw Thread Tapping Cycle

```
G17 G90 G00 G54 X0. Y0.;
G00 Z100.;
M29 S1000;
G99 G84 X0. Y0. Z-20. R10. P1000 K1 F1000.; ---------- (1)
X-10. Z-30.; ---------- (2)
X20.   Z-40.; ---------- (3)
M28;
G80 G91 G28 X0. Y0. Z0.;
```

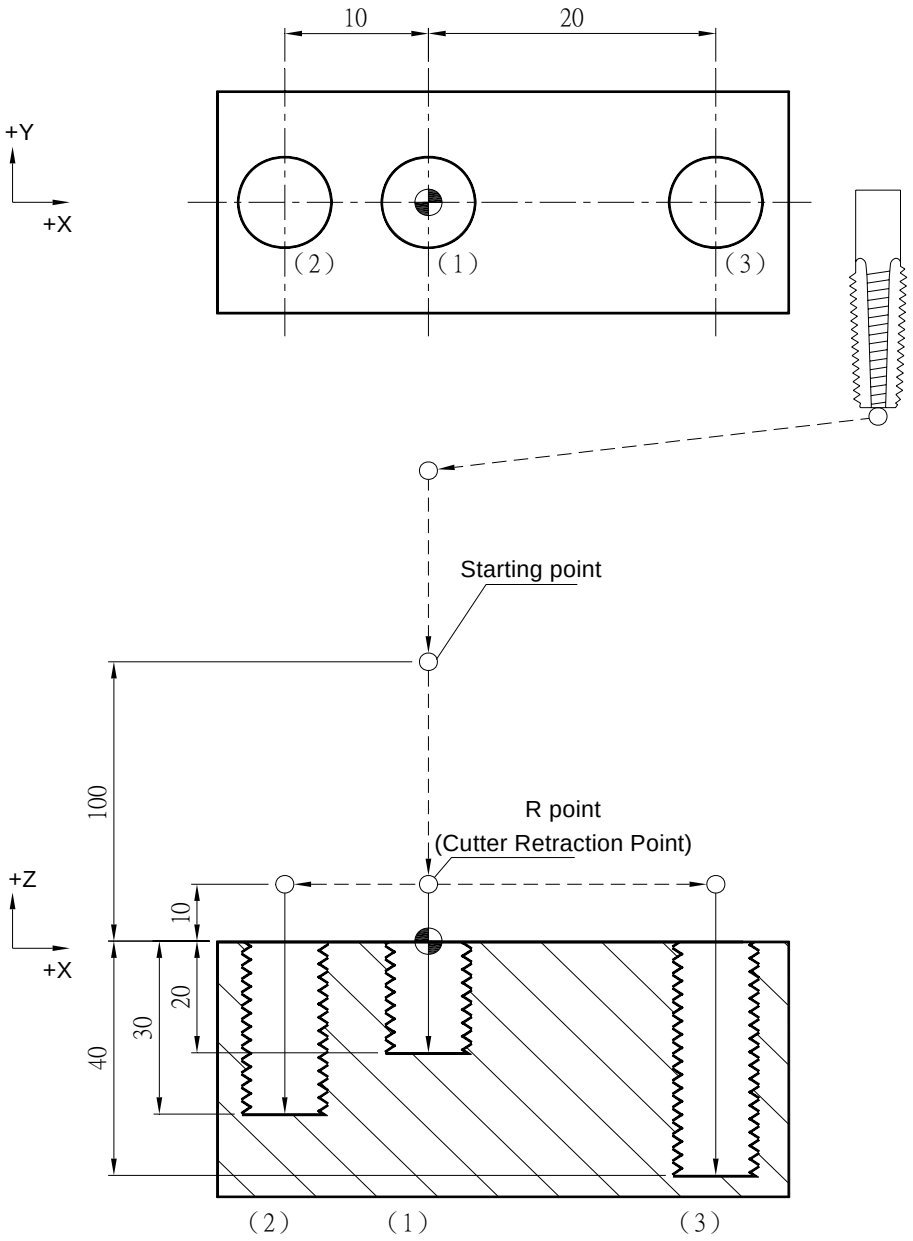

```
G17 G90 G00 G54 X0. Y0.;
G00 Z100.;
M29 S1000;
G98 G84 X0. Y0. Z-20. R10. P1000 K1 F1000.; ---------- (1)
X-10. Z-30.; ---------- (2)
X20.   Z-40.; ---------- (3)
M28;
G80 G91 G28 X0. Y0. Z0.;
```

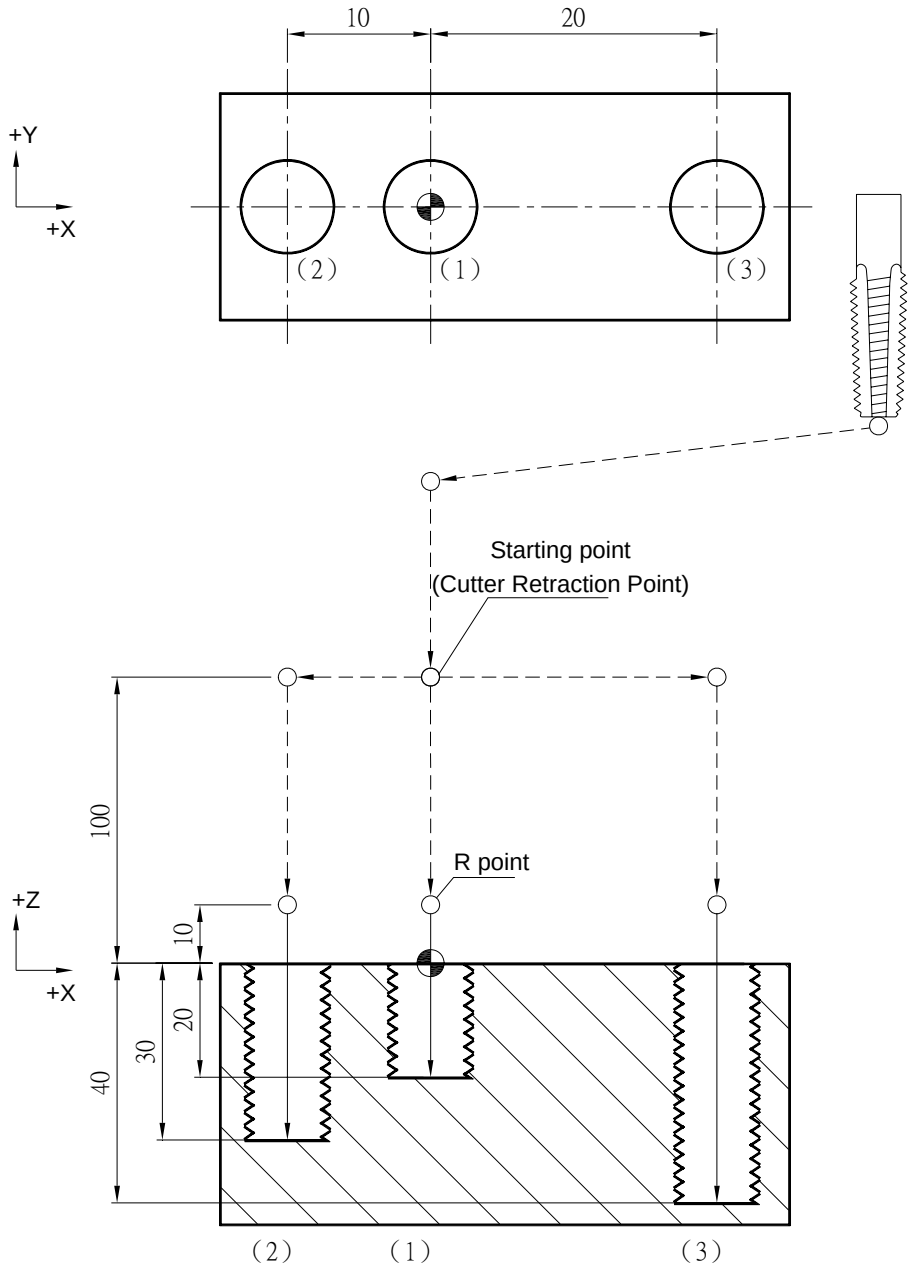

G85 Reaming Cycle

Command Format

```
G85 X__ Y__ Z__ R__ K__ F__;
```

Argument Instruction

- X__Y__

  Coordinate of hole position (mm).

- Z__

  Coordinate of hole bottom (mm).

- R__

  Coordinate of R point (i.e. retraction point) (mm).

- K__

  Times of repetition.

- F__

  Cutting feedrate (G94 mm/min) (G95 mm/rev).

Action Instruction (taking G17 plane for example)

1. Fast position to hole position (X, Y, yet maintain original tool height);
2. Fast position to the coordinate of R point (R);
3. Cut to hole bottom position (Z) with specified cutting feedrate and spindle speed;
4. In G98 mode, return to the starting point at cutting feedrate; In G99 mode, return to R point at cutting feedrate；
5. If K is specified (> 1), repeat steps 2~4 until obtaining specified reaming repetition times; otherwise procedure ends;
6. In G91 mode, argument R specifies the distance between R point and the starting point; argument Z specifies the distance between hole bottom position and R point; If K is specified (> 1), after each reaming process (steps 2~4) the hole will migrate according to specified X, Y and then continue next reaming process; otherwise procedure ends.
7. The difference between G85 and G89 is that the latter can specify the dwell time at the hole bottom.

Illustration

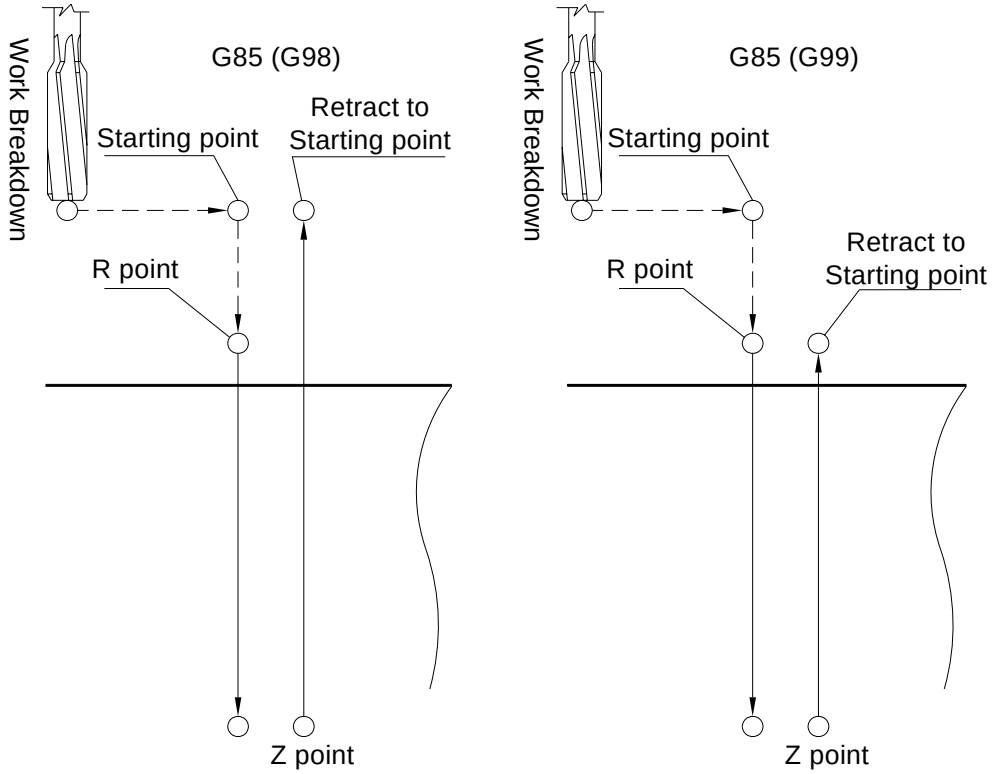

Program Sample

```
M03 S1000;
G17 G90 G00 G54 X0. Y0.;
G00 Z100.;
G99 G85 X0. Y0. Z-30. R10. K1 F100.; ---------- (1)
X-15.;---------- (2)
X-30.;---------- (3)
X-30. Y15.;---------- (4)
G80 G91 G28 X0. Y0. Z0.;
M05;
```

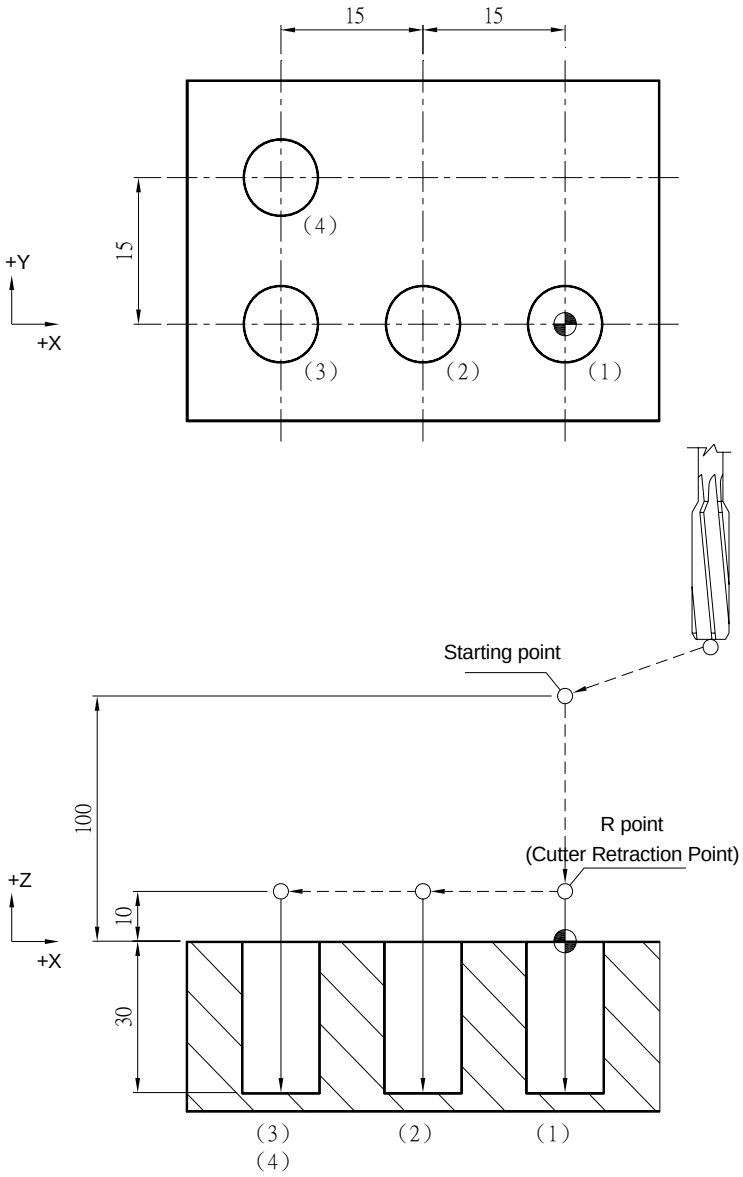

```
M03 S1000;
G17 G90 G00 G54 X0. Y0.;
G00 Z100.;
G98 G85 X0. Y0. Z-30. R10. K1 F100.; ---------- (1)
X-15.;---------- (2)
X-30.;---------- (3)
X-30. Y15.;---------- (4)
G80 G91 G28 X0. Y0. Z0.;
M05;
```

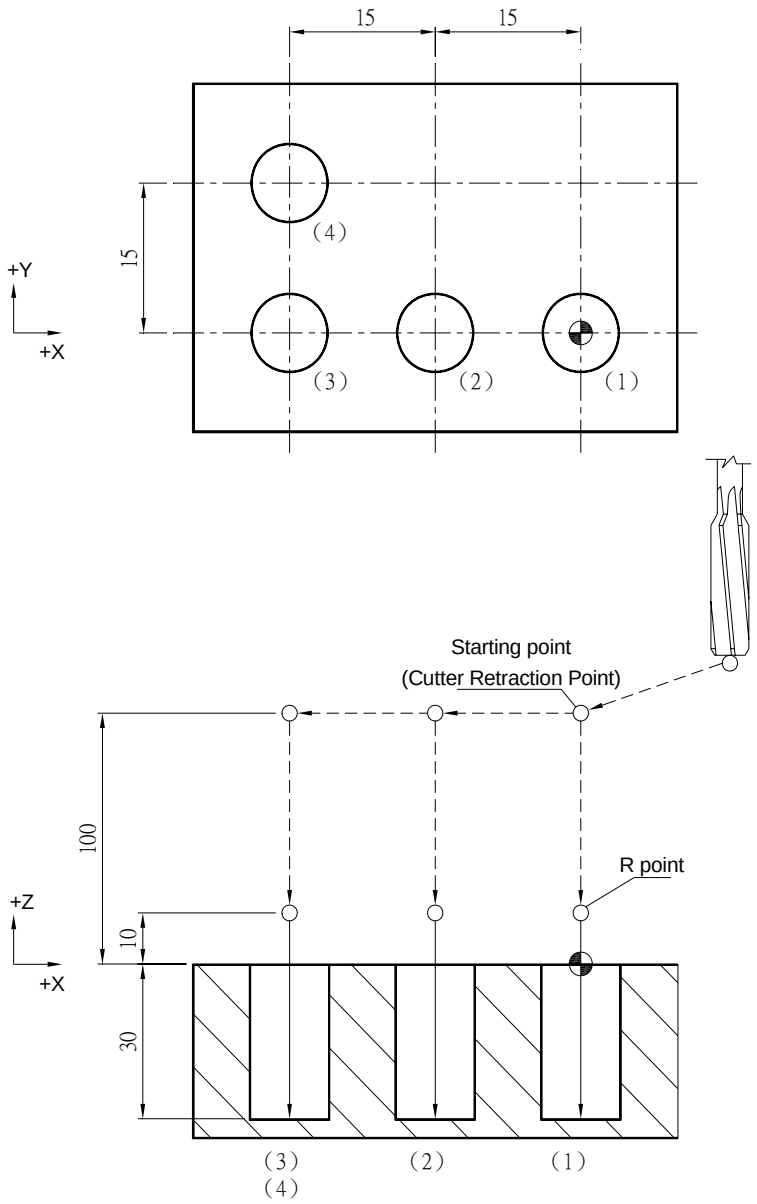

```
M03 S1000;
G17 G90 G00 G54 X0. Y0.;
G00 Z100.;
G99 G85 X0. Y0. Z-20. R10. K1 F100.; ---------- (1)
G91 X-10. K3;---------- (2)
Y10.   K3; ---------- (3)
G80 G91 G28 X0. Y0. Z0.;
M05;
```

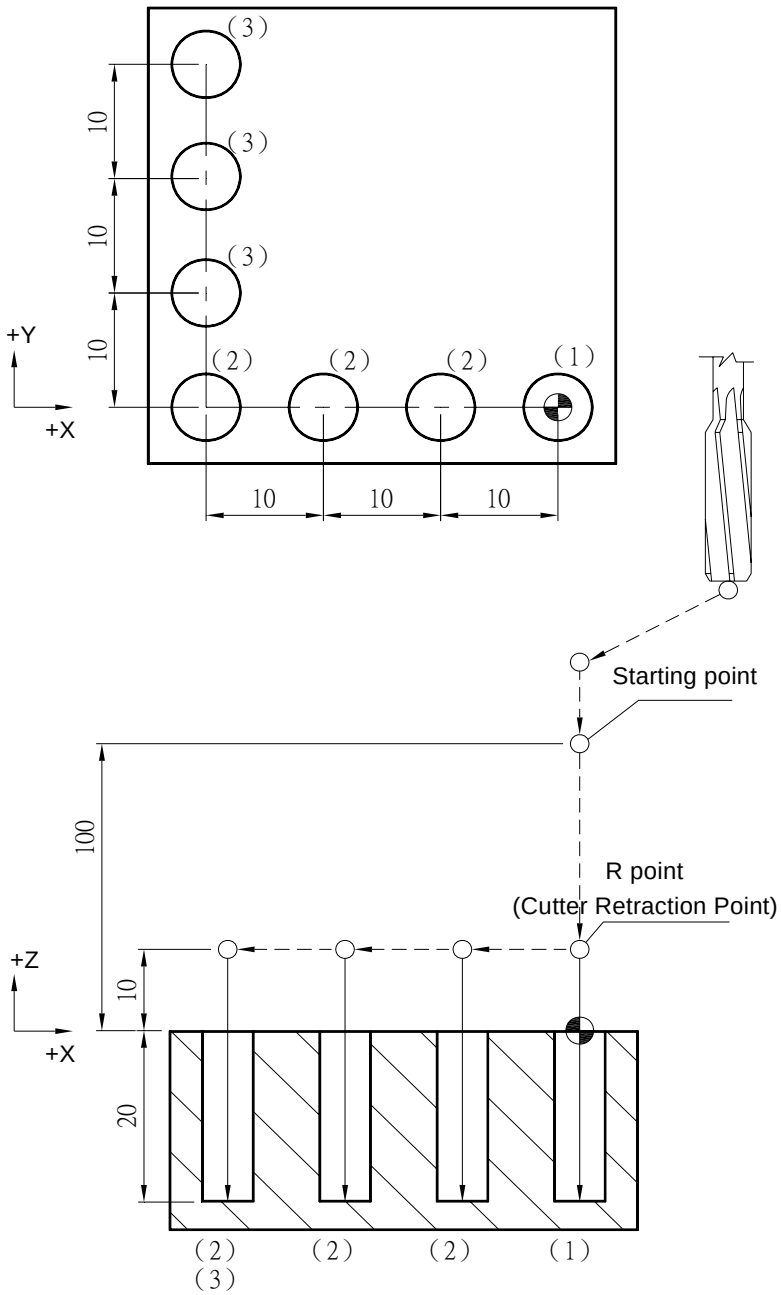

```
M03 S1000;
G17 G90 G00 G54 X0. Y0.;
G00 Z100.;
G98 G85 X0. Y0. Z-20. R10. K1 F100.; ---------------------------------------------------------------- (1)
G91 X-10. K3;---------------------------------------------------------------------------------------- (2)
Y10.   K3; ------------------------------------------------------------------------------------------ (3)
G80 G91 G28 X0. Y0. Z0.;
M05;
```

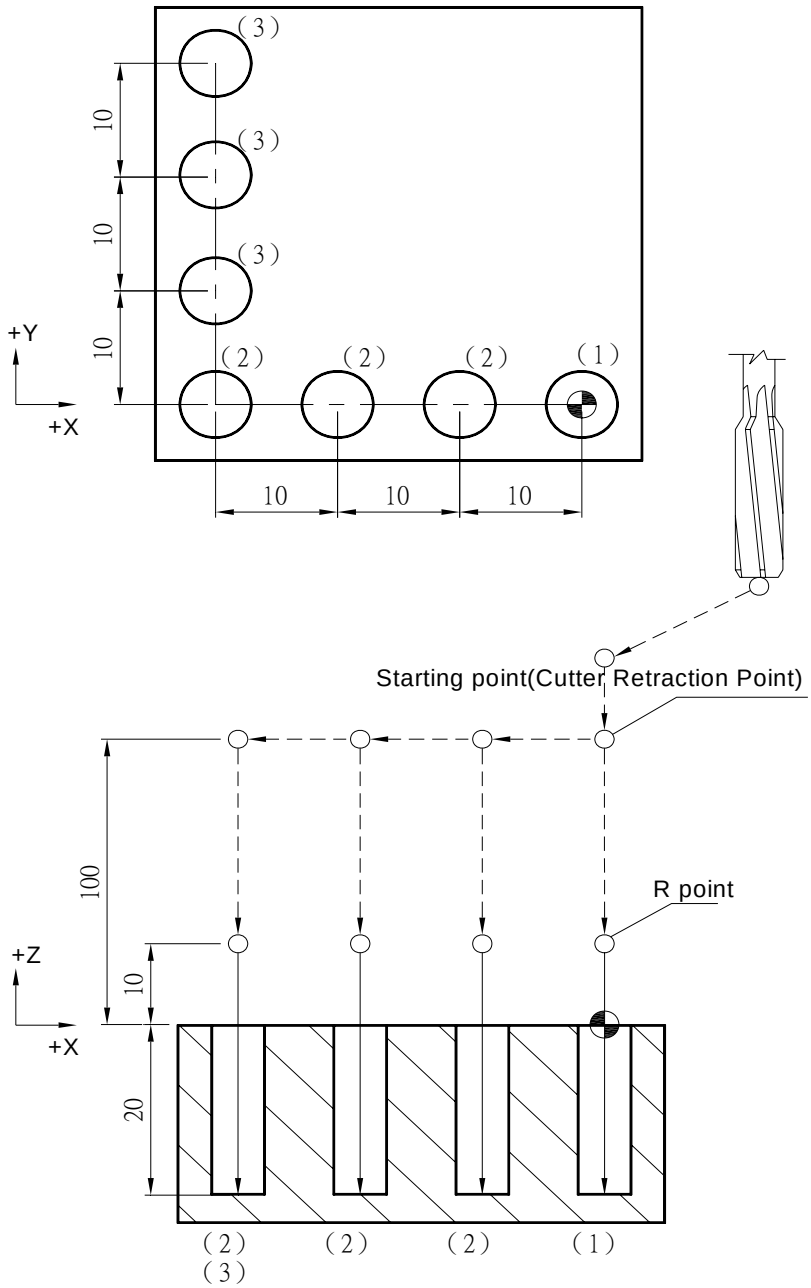

M03 S1000;

G17 G90 G00 G54 X0. Y0.;

G00 Z100.;

G99 G85 X0. Y0. Z-20. R10. K1 F100.; ---------- (1)

X-10. Z-30.; ---------- (2)

X20. Z-40.; ---------- (3)

G80 G91 G28 X0. Y0. Z0.;

M05;

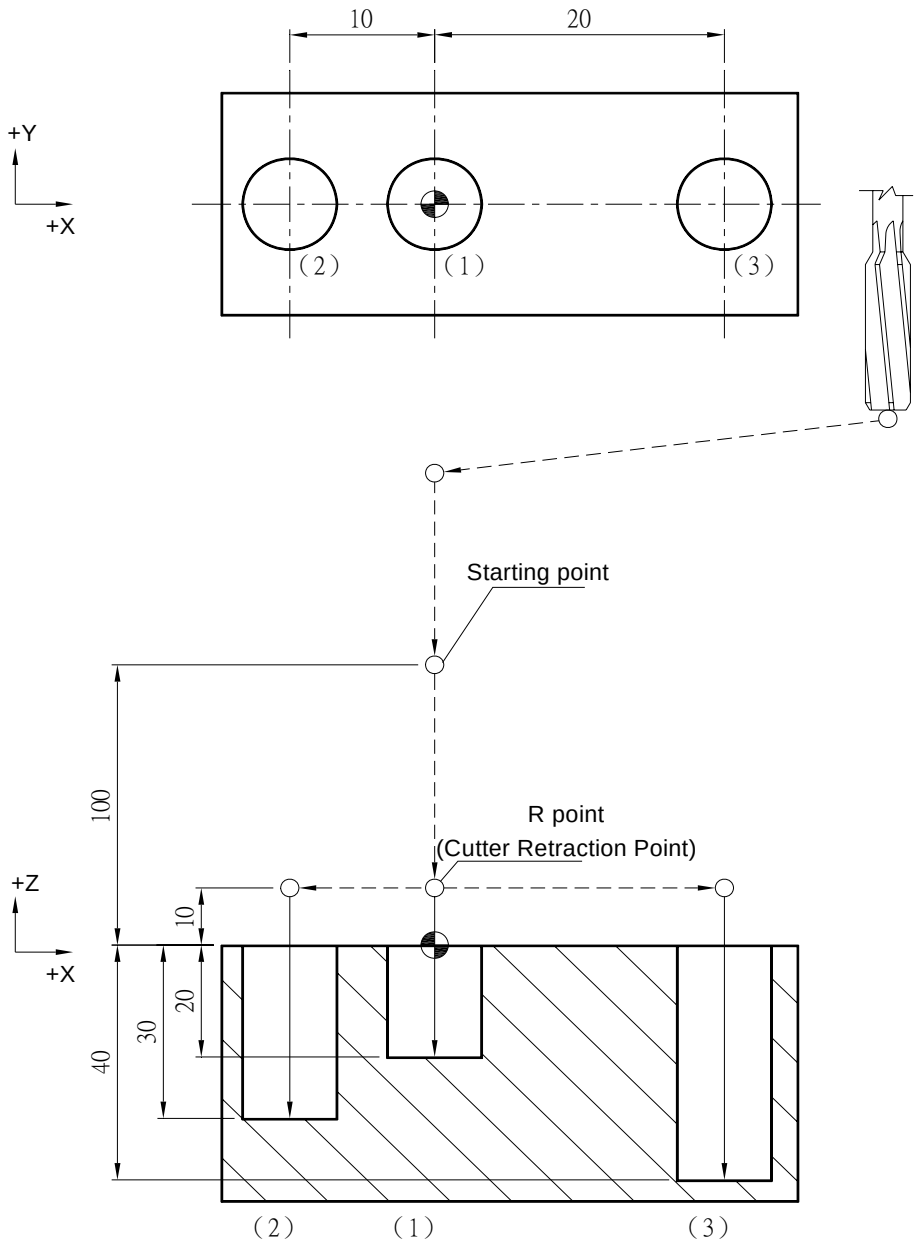

```
M03 S1000;
G17 G90 G00 G54 X0. Y0.;
G00 Z100.;
G98 G85 X0. Y0. Z-20. R10. K1 F100.; ---------- (1)
X-10. Z-30.; ---------- (2)
X20.   Z-40.; ---------- (3)
G80 G91 G28 X0. Y0. Z0.;
M05;
```

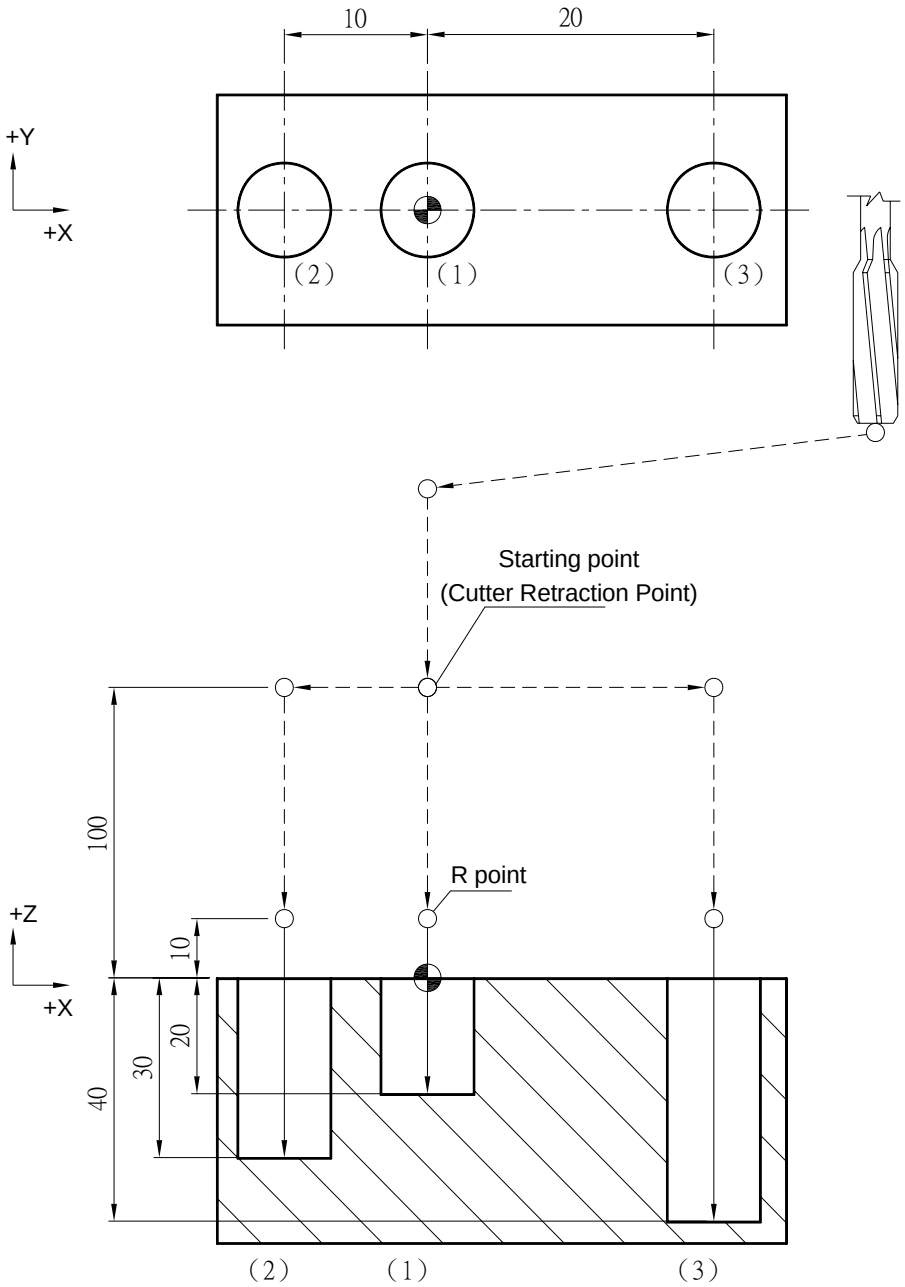

G86 Boring Cycle

Command Format

```
G86 X__ Y__ Z__ R__ K__ F__;
```

Argument Instruction

- X__Y__
  Coordinate of hole position (mm).
- Z__
  Coordinate of hole bottom (mm).
- R__
  Coordinate of R point (i.e. retraction point) (mm).
- K__
  Times of repetition.
- F__
  Cutting feedrate (G94 mm/min) (G95 mm/rev)

Action Instruction (taking G17 plane for example)

1. Fast position to hole position (X, Y, yet main tain original tool height);
2. Fast position to the coordinate of R point (R);
3. Cut to hole bottom position (Z) with specified cutting feedrate and rotation speed of spindle;
4. Spindle stops rotating;
5. In G98 mode, fast return to starting point; in G99 mode, fast return to R point;
6. Spindle rotates clockwisely;
7. If K is specified (> 1), repeat steps 2~6 until obtaining specified reaming repetition times; otherwise procedure ends;
8. In G91 mode, argument R specifies the distance between R point and the starting point; argument Z specifies the distance between hole bottom position and R point; If K is specified (> 1), if K is specified (> 1), after each reaming process (steps 2~6), the hole will migrate according to specified X, Y and then continue next reaming process.
9. The difference between G86 and G88 is that the latter can specify the dwell time at hole bottom.

Illustration

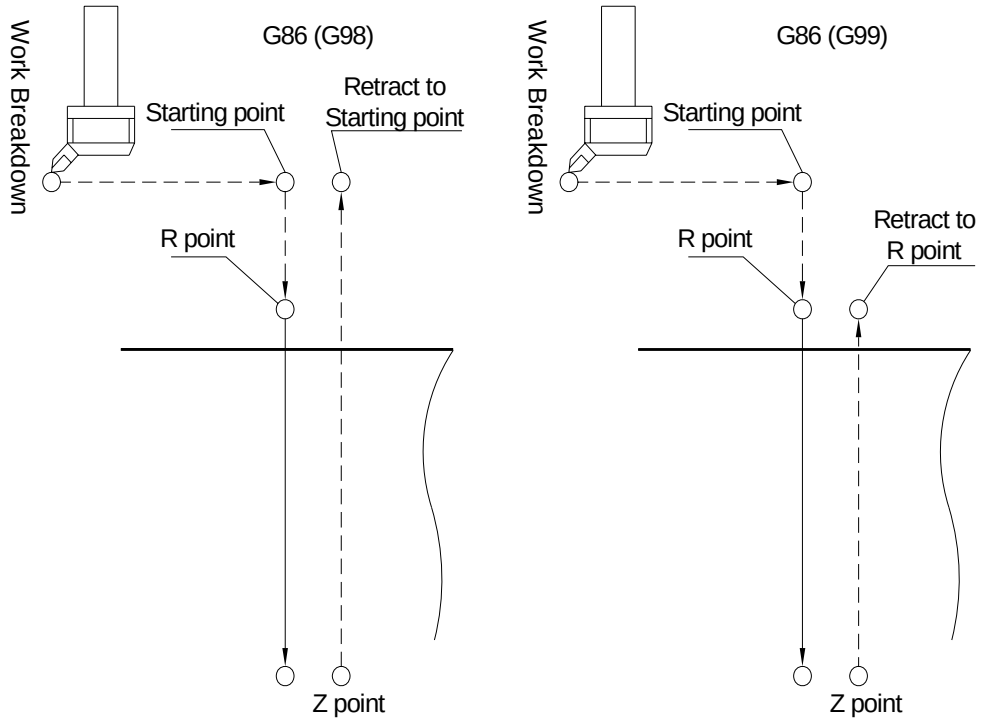

Program Sample

```
M03 S1000;
G17 G90 G00 G54 X0. Y0.;
G00 Z100.;
G99 G86 X0. Y0. Z-30. R10. K1 F100.; ---------- (1)
X-15.;---------- (2)
X-30.;---------- (3)
X-30. Y15.;---------- (4)
G80 G91 G28 X0. Y0. Z0.;
M05;
```

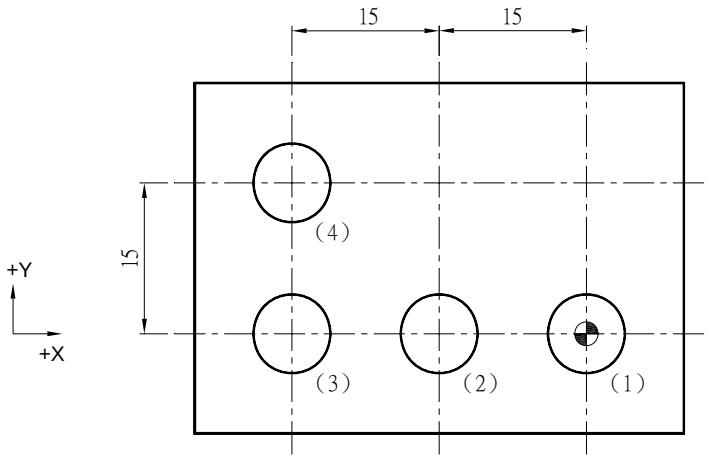

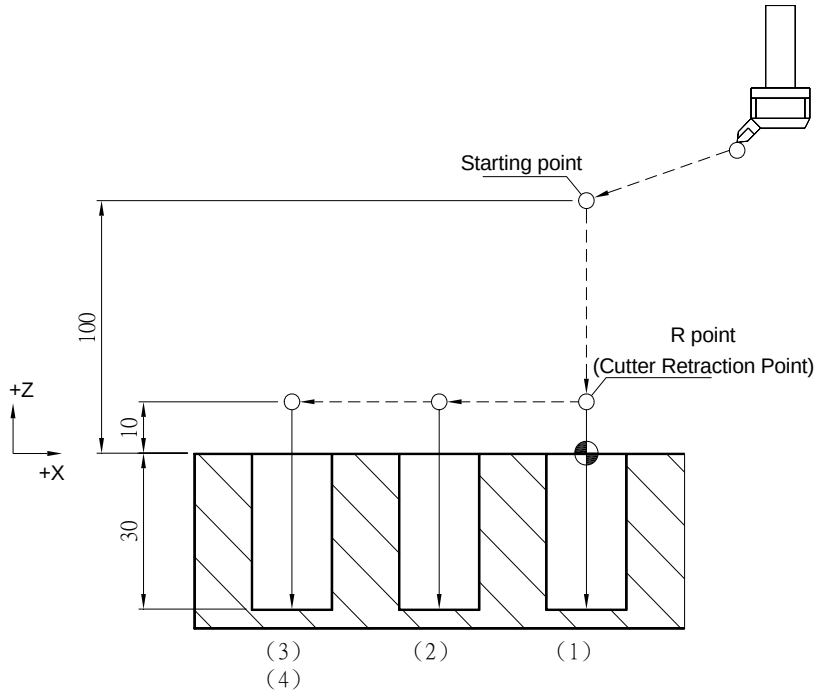

```
M03 S1000;
G17 G90 G00 G54 X0. Y0.;
G00 Z100.;
G98 G86 X0. Y0. Z-30. R10. K1 F100.; ---------------------------------------------------------------- (1)
X-15.;---------------------------------------------------------------------------------------------------- (2)
X-30.;---------------------------------------------------------------------------------------------------- (3)
X-30. Y15.;----------------------------------------------------------------------------------------------- (4)
G80 G91 G28 X0. Y0. Z0.;
M05;
```

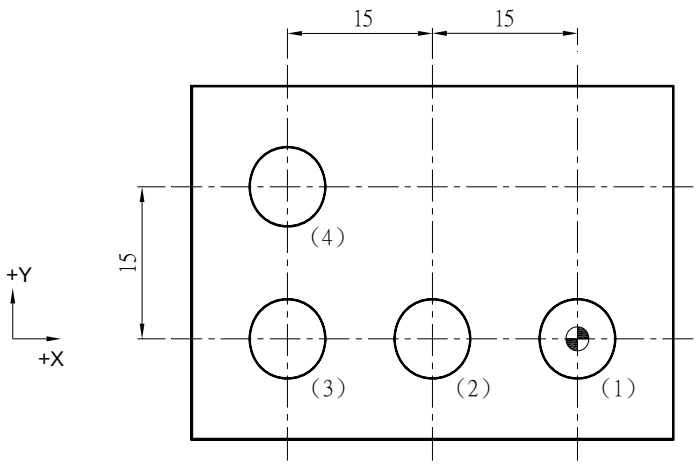

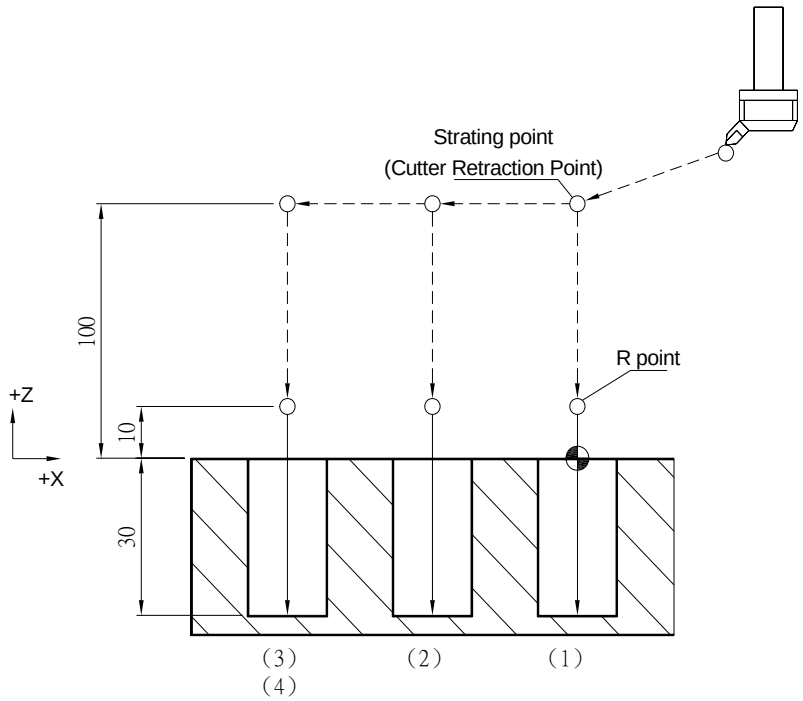

```
M03 S1000;
G17 G90 G00 G54 X0. Y0.;
G00 Z100.;
G99 G86 X0. Y0. Z-20. R10. K1 F100.; ---------- (1)
G91 X-10. K3;---------- (2)
Y10.   K3; ---------- (3)
G80 G91 G28 X0. Y0. Z0.;
M05;
```

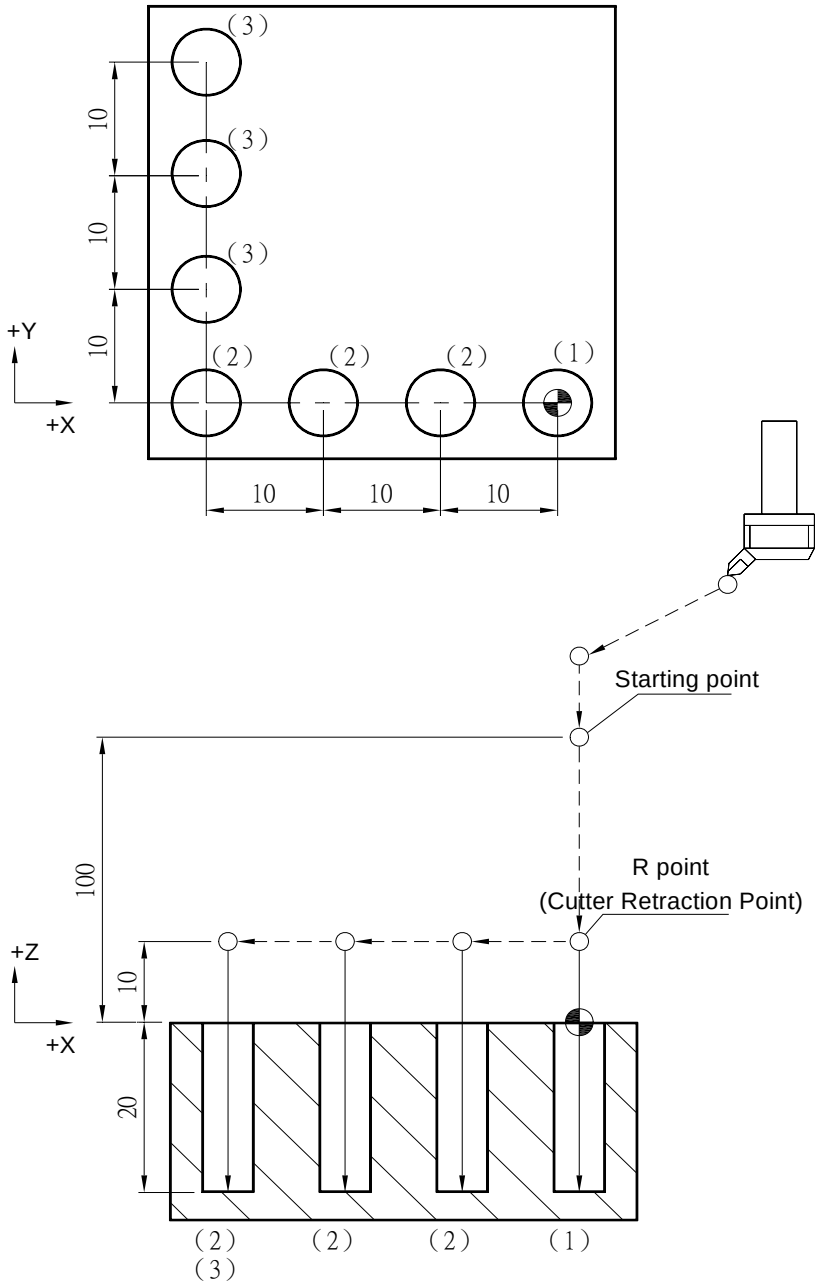

```
M03 S1000;
G17 G90 G00 G54 X0. Y0.;
G00 Z100.;
G98 G86 X0. Y0. Z-20. R10. K1 F100.; ---------------------------------------------------------------- (1)
G91 X-10. K3;---------------------------------------------------------------------------------------- (2)
Y10.   K3; ------------------------------------------------------------------------------------------ (3)
G80 G91 G28 X0. Y0. Z0.;
M05;
```

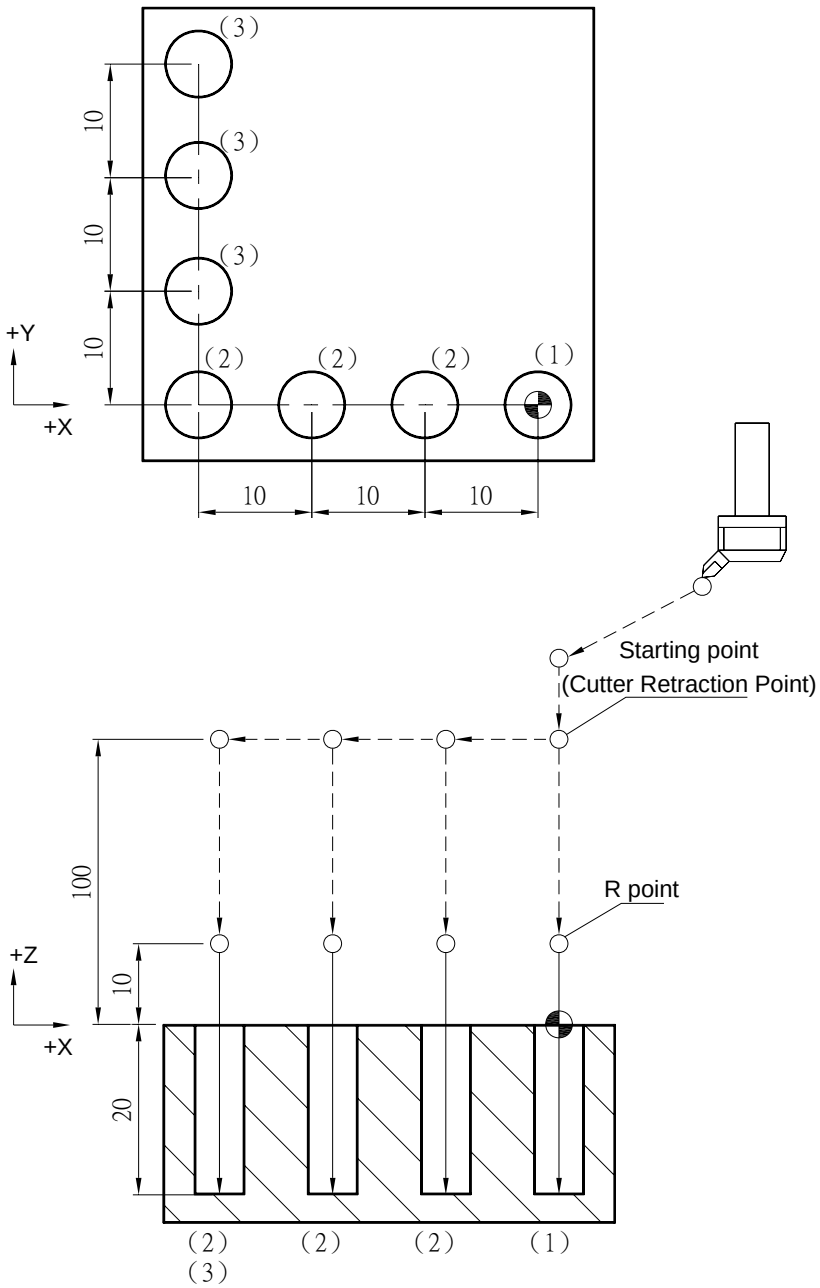

M03 S1000;

G17 G90 G00 G54 X0. Y0.;

G00 Z100.;

G99 G86 X0. Y0. Z-20. R10. K1 F100.; ---------- (1)

X-10. Z-30.; ---------- (2)

X20. Z-40.; ---------- (3)

G80 G91 G28 X0. Y0. Z0.;

M05;

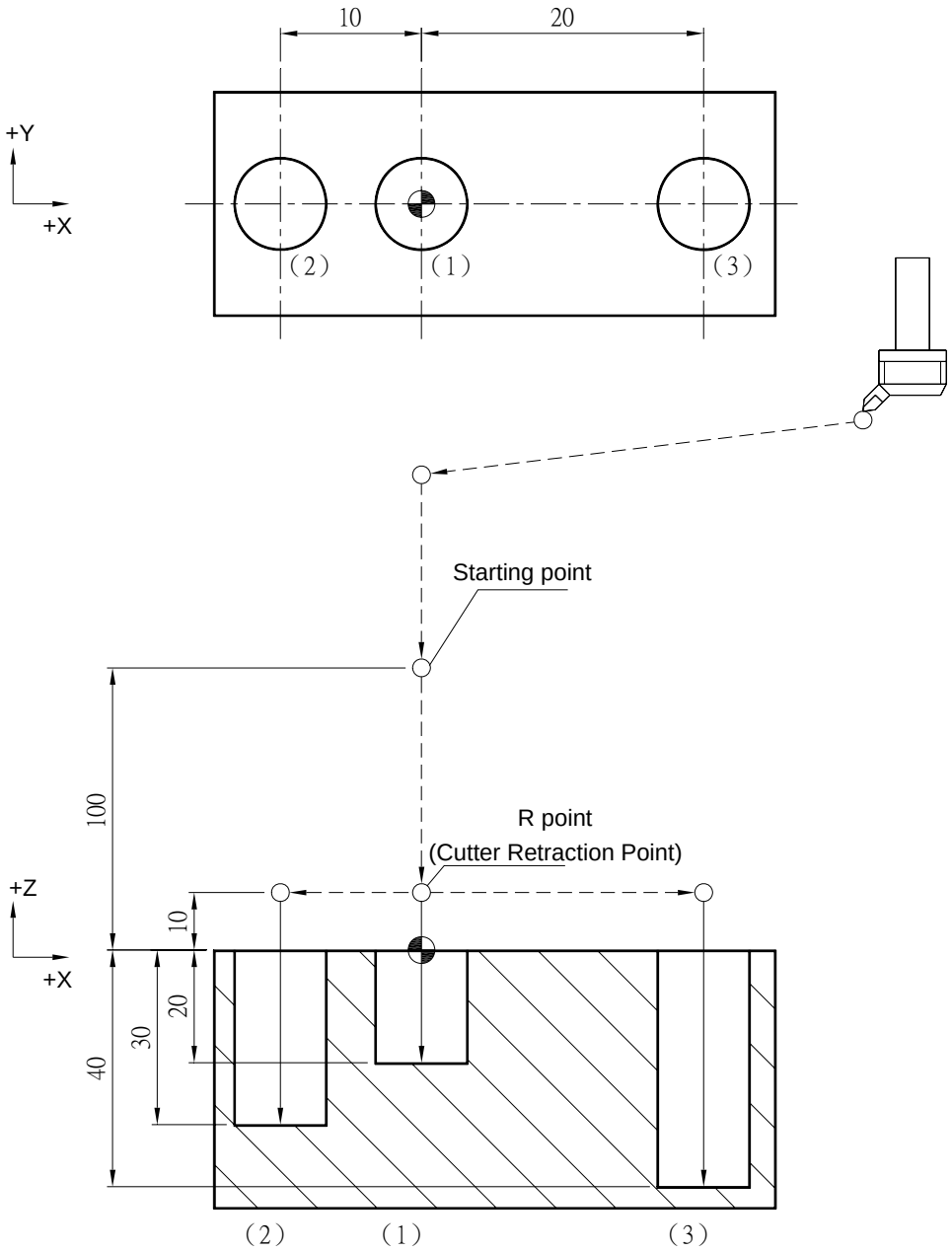

```
M03 S1000;
G17 G90 G00 G54 X0. Y0.;
G00 Z100.;
G98 G86 X0. Y0. Z-20. R10. K1 F100.; ---------- (1)
X-10. Z-30.; ---------- (2)
X20.   Z-40.; ---------- (3)
G80 G91 G28 X0. Y0. Z0.;
M05;
```

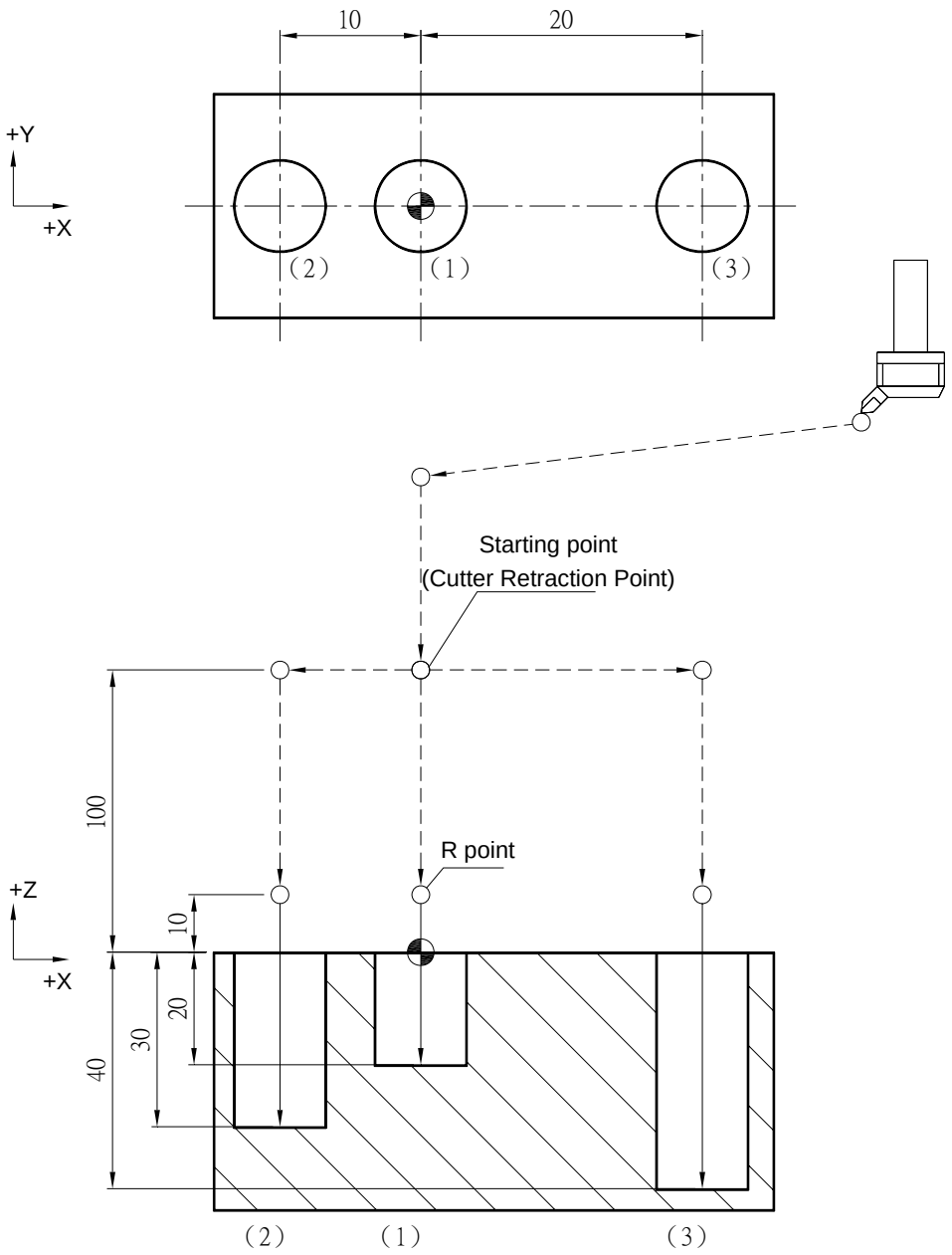

G87 Back Boring/Cutting

Command Format

```
G87 X__ Y__ Z__ R__ P__ Q__ K__ F__;
```

Argument Instruction

- X__Y__
  Coordinate of hole position (mm).
- Z__
  Coordinate of hole bottom (mm).
- R__
  Coordinate of R point (i.e. retraction point) (mm).
- P__
  Pause time at the hole bottom (1/1000 sec), minimum unit, decimal timess are not allowed.
- Q__
  Offset of the hole bottom (mm), and the migration direction is set by the parameter #0121.
- K__
  Times of repetition.
- F__
  Cutting feedrate (G94 mm/min) (G95 mm/rev)

Action Instruction (taking G17 plane for example)

1. Fast position to hole position (X, Y, yet main tain original tool height);
2. Run M19 for spindle positioning;
3. Tool migrates, migration distance is set by argument Q, and migration direction is set by parameter #0121;
4. Fast position to the coordinate of R point (R);
5. Tool migrates, and return to the original hole coordinate (reverse step 3);
6. Disable spindle positioning mode, spindle rotates clockwisely;
7. Cut to the hole bottom position (Z) with specified cutting feedrate and spindle speed;
8. If P is specified, dwell at the hole bottom for specified time;
9. Spindle stops, execute M19 to do spindle positioning;
10. Tool migrates, the migration distance is set by argument Q and the migration direction is set by parameter #0121

11. In G98 mode, fast return to starting point; In G99 mode, fast return to R point;
12. Tool migrates, and return to the original hole coordinate (reverse step 10);
13. Disable spindle positioning mode, spindle rotates;
14. If K is specified (> 1), repeat steps 2~13 until obtaining specified boring repetition times; otherwise procedure ends;
15. In G91 mode, argument R specifies the distance between R point and the starting point; argument Z specifies the distance between hole bottom position and R point; If K is specified (> 1), after each boring process (steps 2~15), the hole will do incremental offset according to specified X, Y and then continue next boring process..

Illustration

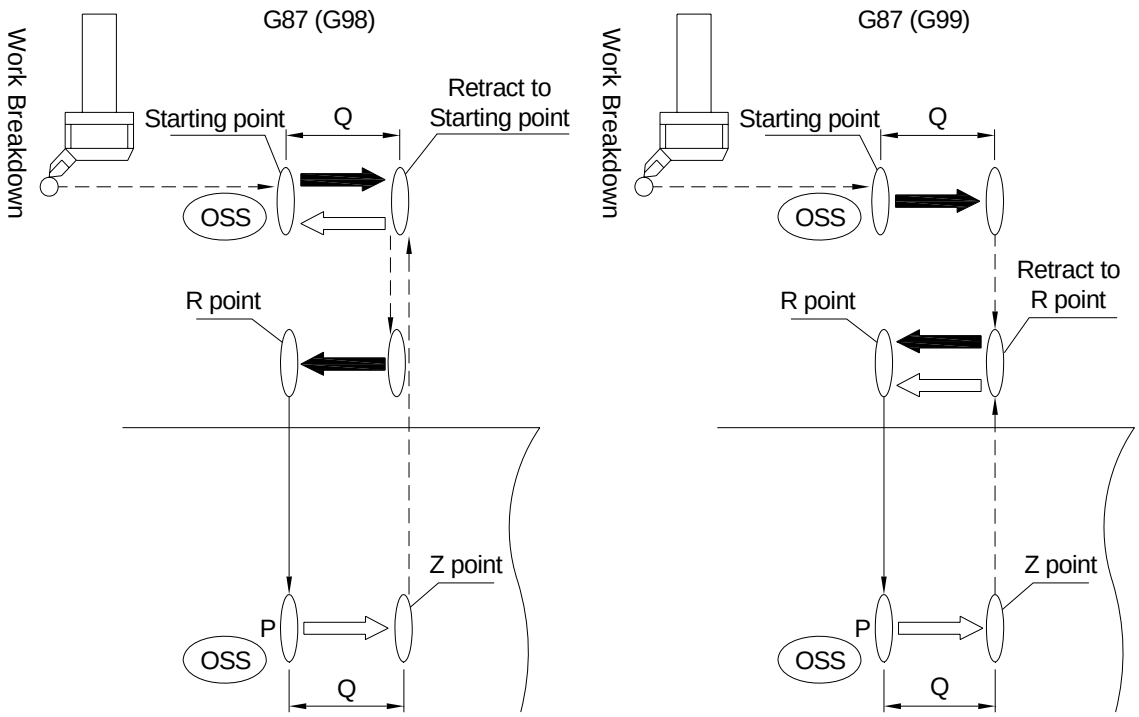

Program Sample

```
M03 S1000;
G17 G90 G00 G54 X0. Y0.;
G00 Z100.;
G99 G87 X0. Y0. Z-30. R10. P1000 Q5. K1 F100.; ---------- (1)
X-15.;---------- (2)
X-30.;---------- (3)
X-30. Y15.;---------- (4)
G80 G91 G28 X0. Y0. Z0.;
M05;
```

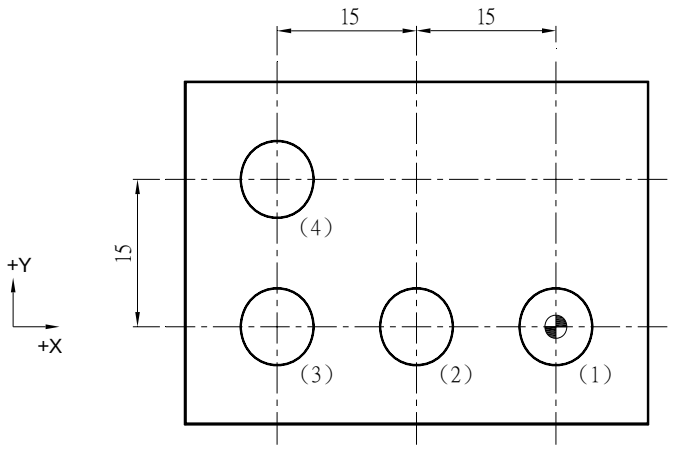

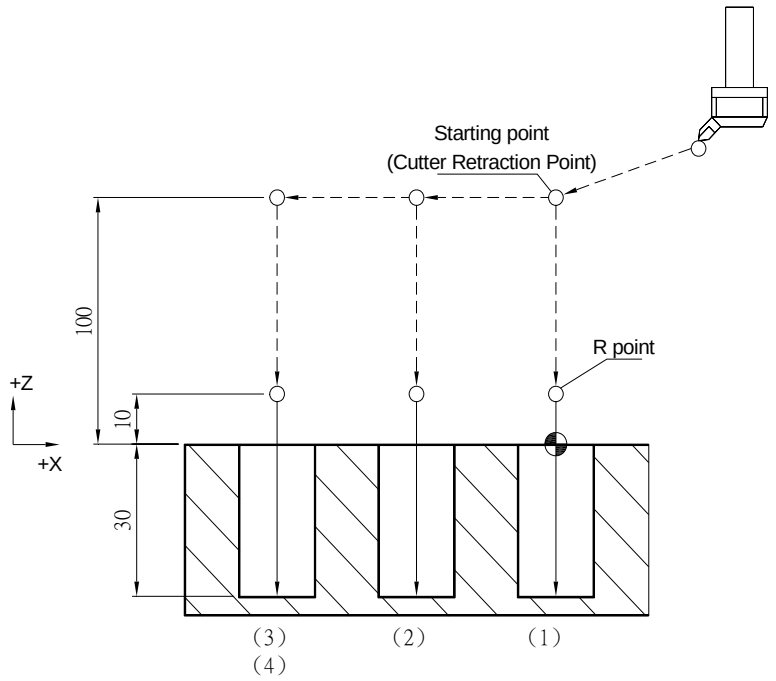

```
M03 S1000;
G17 G90 G00 G54 X0. Y0.;
G00 Z100.;
G98 G87 X0. Y0. Z-30. R10. P1000 Q5. K1 F100.; ---------- (1)
X-15.;---------- (2)
X-30.;---------- (3)
X-30. Y15.;---------- (4)
G80 G91 G28 X0. Y0. Z0.;
M05;
```

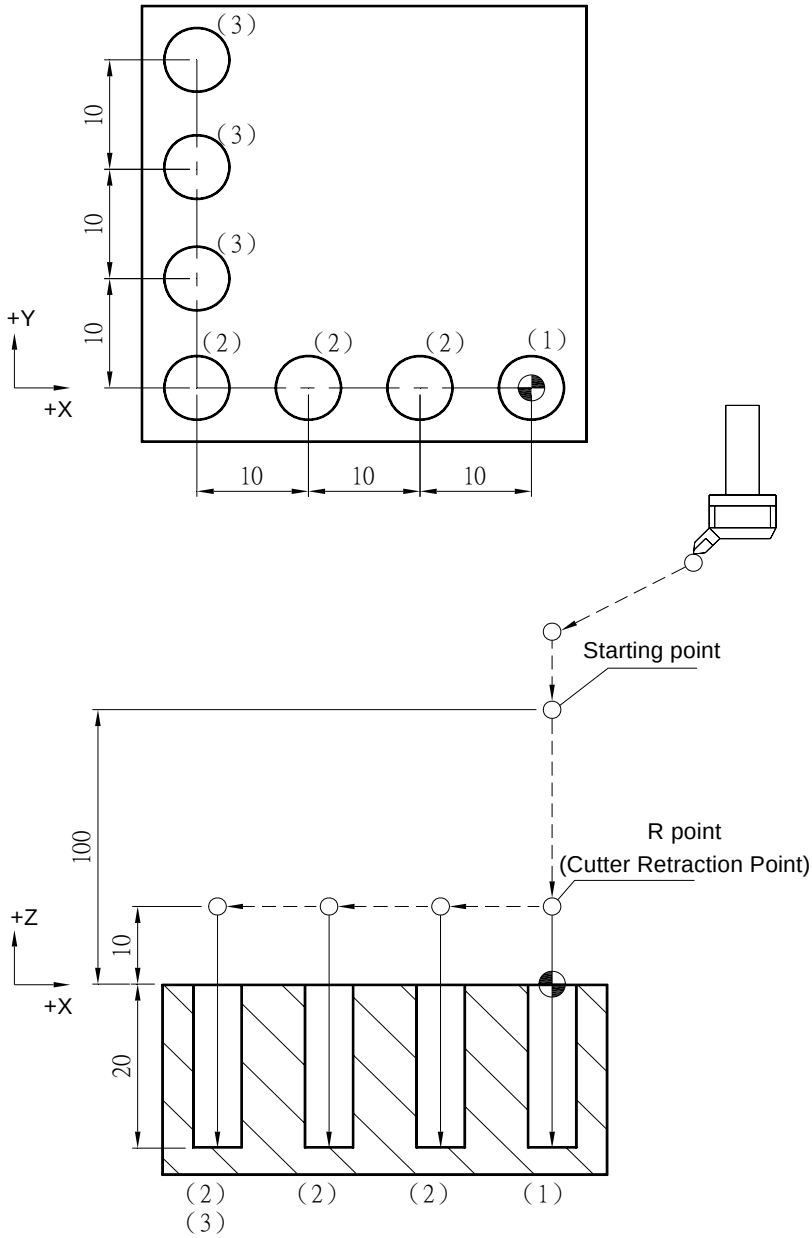

```
M03 S1000;
G17 G90 G00 G54 X0. Y0.;
G00 Z100.;
G99 G87 X0. Y0. Z-20. R10. P1000 Q5. K1 F100.; ---------- (1)
G91 X-10. K3;---------- (2)
Y10.   K3; ---------- (3)
G80 G91 G28 X0. Y0. Z0.;
M05;
```

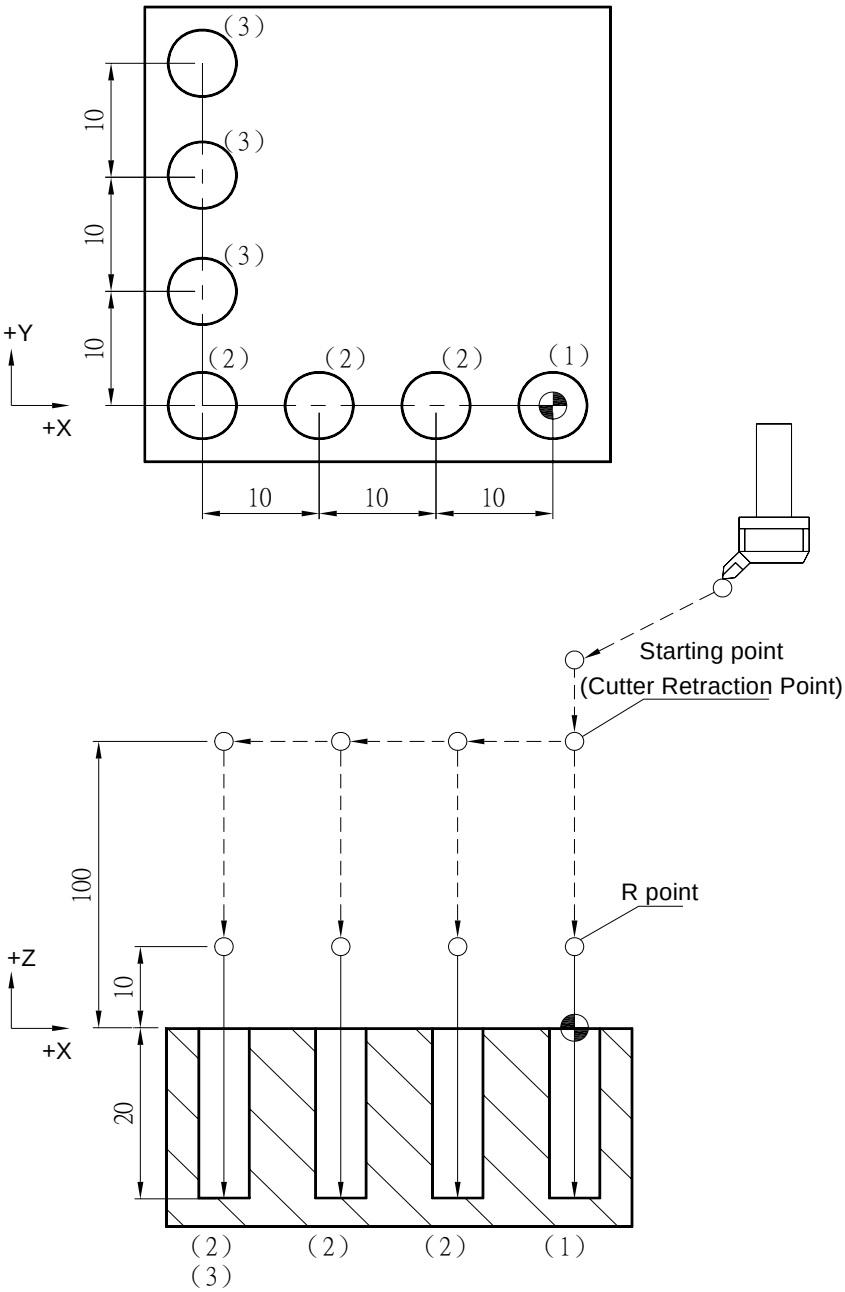

```
M03 S1000;
G17 G90 G00 G54 X0. Y0.;
G00 Z100.;
G98 G87 X0. Y0. Z-20. R10. P1000 Q5. K1 F100.; ---------- (1)
G91 X-10. K3;---------- (2)
Y10.   K3; ---------- (3)
G80 G91 G28 X0. Y0. Z0.;
M05;
```

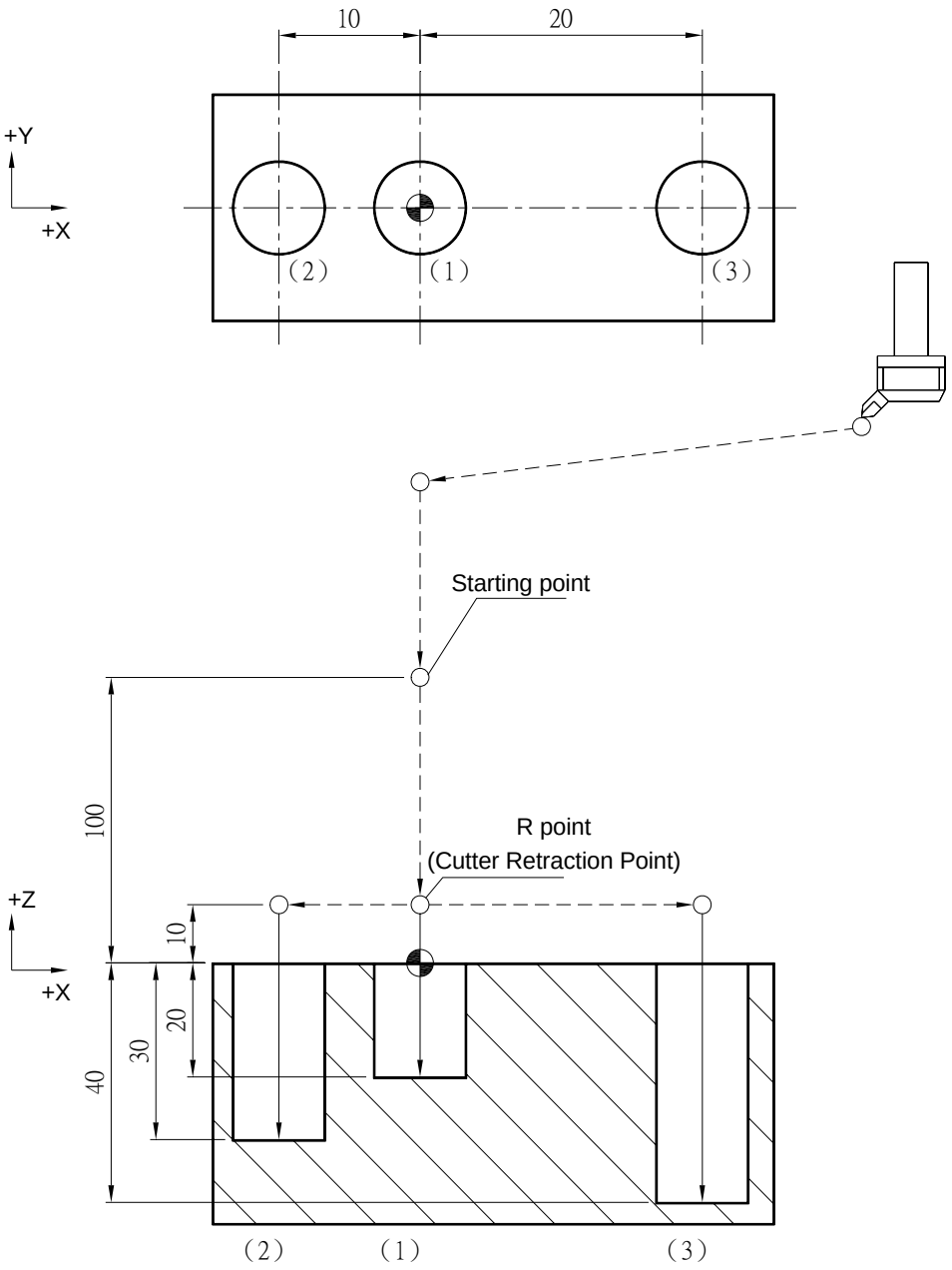

M03 S1000;

G17 G90 G00 G54 X0. Y0.;

G00 Z100.;

G99 G87 X0. Y0. Z-20. R10. P1000 Q5. K1 F100.; ---------- (1)

X-10. Z-30.; ---------- (2)

X20. Z-40.; ---------- (3)

G80 G91 G28 X0. Y0 Z0.;

M05;

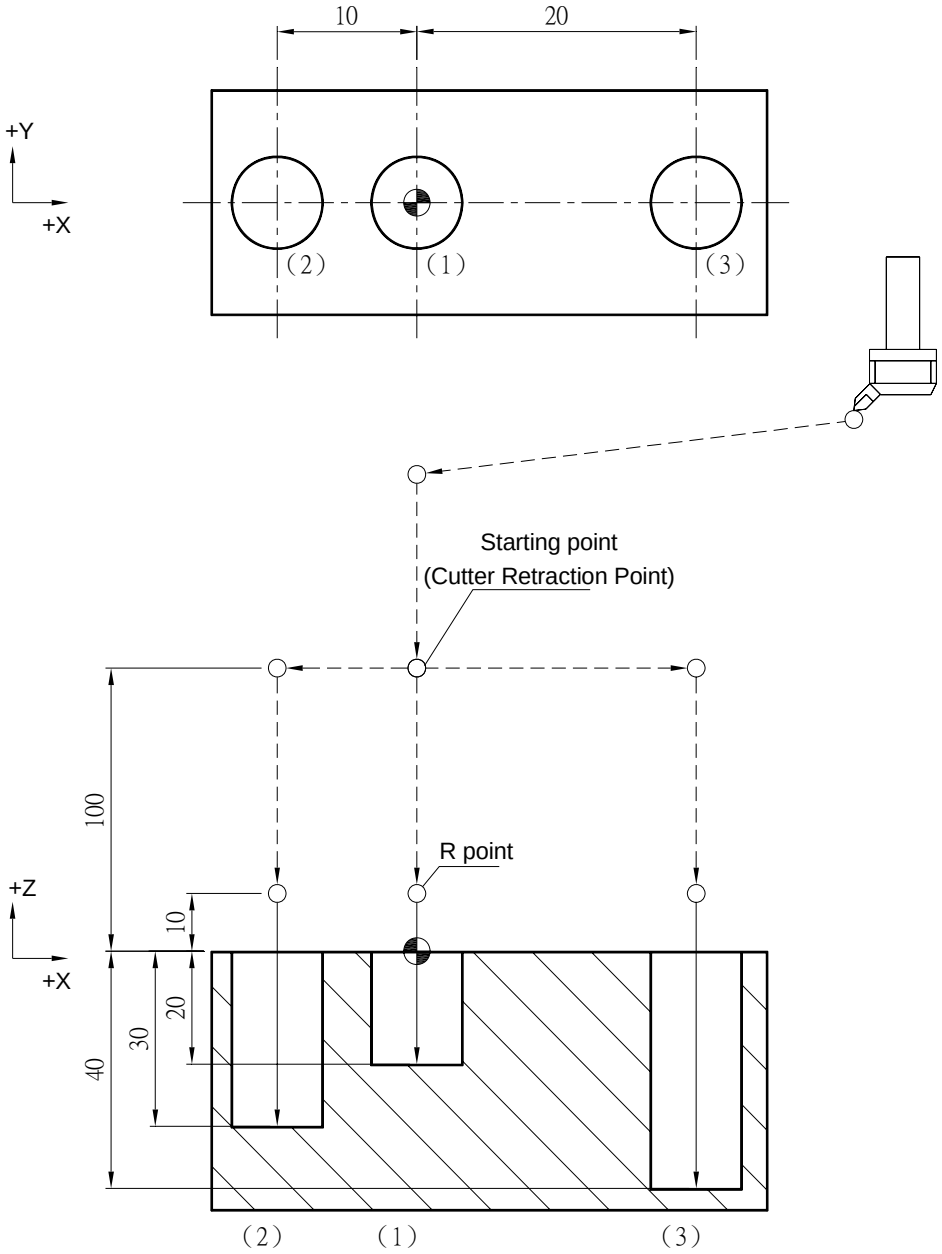

G88 Boring Cycle

Command Format

```
G88 X__ Y__ Z__ R__ P__ K__ F__;
```

Argument Instruction

- X__Y__

  Coordinate of hole position (mm).

- Z__

  Coordinate of hole bottom (mm).

- R__

  Coordinate of R point (i.e. retraction point) (mm).

- P__

  Dwell time at the hole bottom (1/1000 sec), minimum unit, decimal numbers are not allowed.

- K__

  Times of repetition.

- F__

  Cutting feedrate (G94 mm/min) (G95 mm/rev)

Action Instruction (taking G17 plane for example)

1. Fast position to hole position (X, Y, yet main tain original tool height);
2. Fast position to the coordinate of R point (R);
3. Cut to the hole bottom position (Z) with specified cutting feedrate and rotation speed of spindle;
4. If P is specified, dwell at hole bottom for specified time;
5. Spindle stops rotating;
6. In G98 mode, return to the starting point at cutting feedrate; In G99 mode, return to the R point at cutting feedrate ;
7. Spindle rotates clockwisely;

8. If K is specified (> 1), repeat steps 2~7 until obtaining specified boring repetition times; otherwise procedure ends;
9. In G91 mode, argument R specifies the distance between R point and the starting point; argument Z specifies the distance between hole bottom position and R point; If K is specified (> 1), if K is specified (> 1), after each tapping process (steps 2~7), the hole will do incremental offset according to specified X, Y and then continue next boring process..
10. The difference between G86 and G88 is that the latter can specify the dwell time at the hole bottom.

Illustration

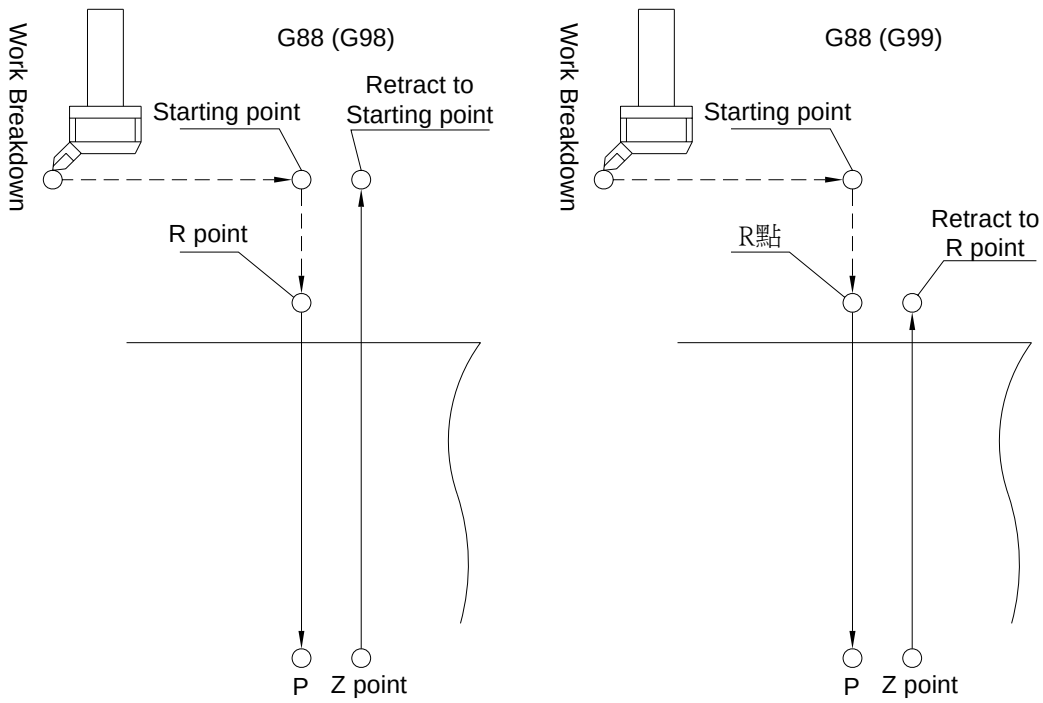

Program Sample

```
M03 S1000;
G17 G90 G00 G54 X0. Y0.;
G00 Z100.;
G99 G88 X0. Y0. Z-30. R10. P1000 K1 F100.; ---------- (1)
X-15.;---------- (2)
X-30.;---------- (3)
X-30. Y15.;---------- (4)
G80 G91 G28 X0. Y0. Z0.;
M05;
```

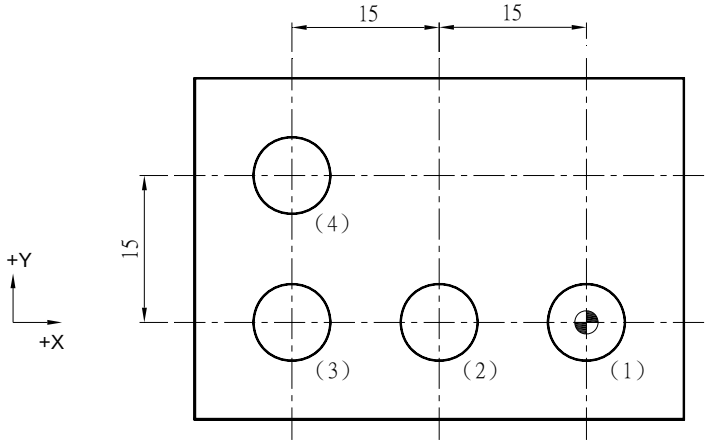

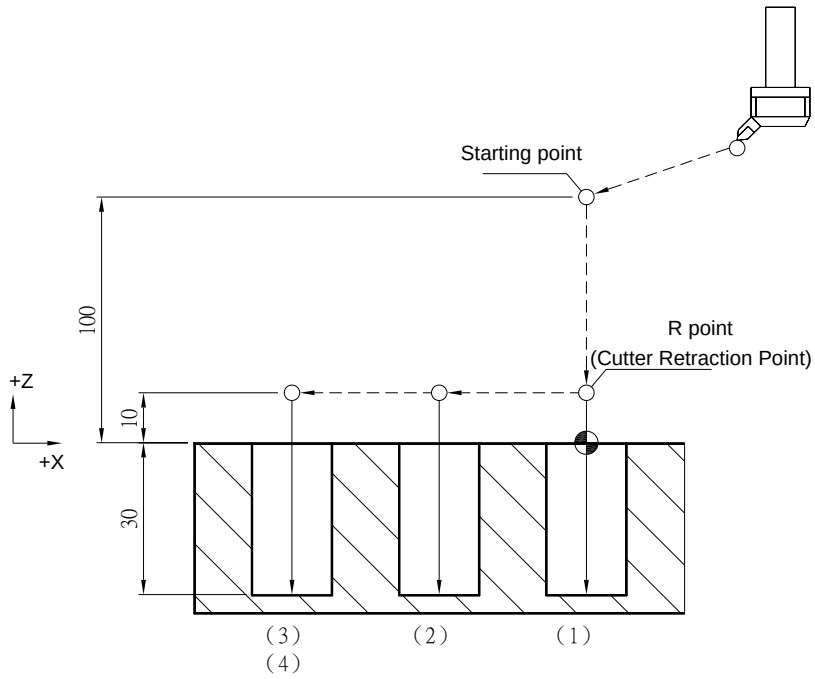

```
M03 S1000;
G17 G90 G00 G54 X0. Y0.;
G00 Z100.;
G98 G88 X0. Y0. Z-30. R10. P1000 K1 F100.; ---------- (1)
X-15.;---------- (2)
X-30.;---------- (3)
X-30. Y15.;---------- (4)
G80 G91 G28 X0. Y0. Z0.;
M05;
```

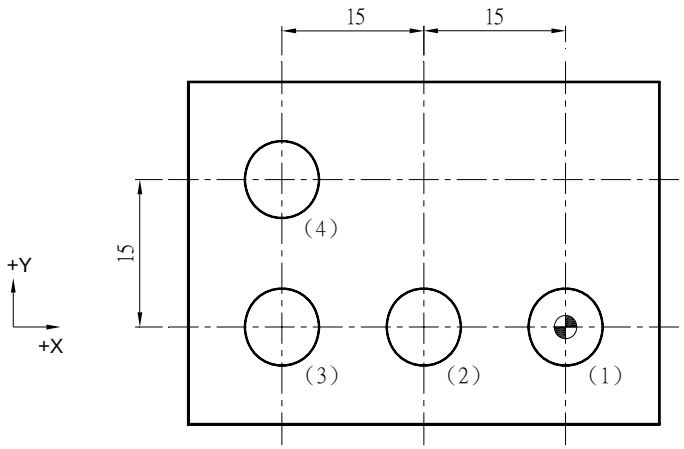

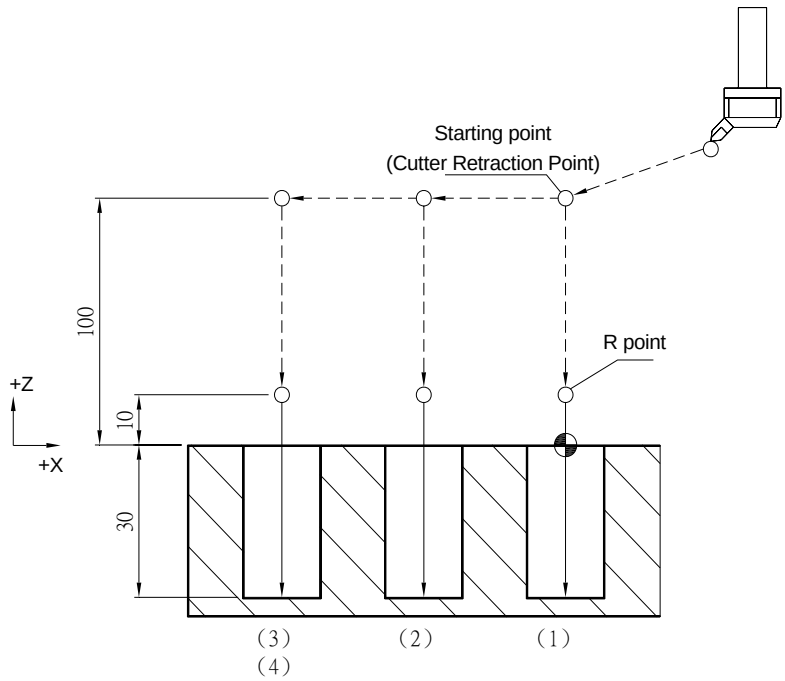

```
M03 S1000;
G17 G90 G00 G54 X0. Y0.;
G00 Z100.;
G99 G88 X0. Y0. Z-20. R10. P1000 K1 F100.; ---------- (1)
G91 X-10. K3; ---------- (2)
Y10.   K3; ---------- (3)
G80 G91 G28 X0. Y0. Z0.;
M05;
```

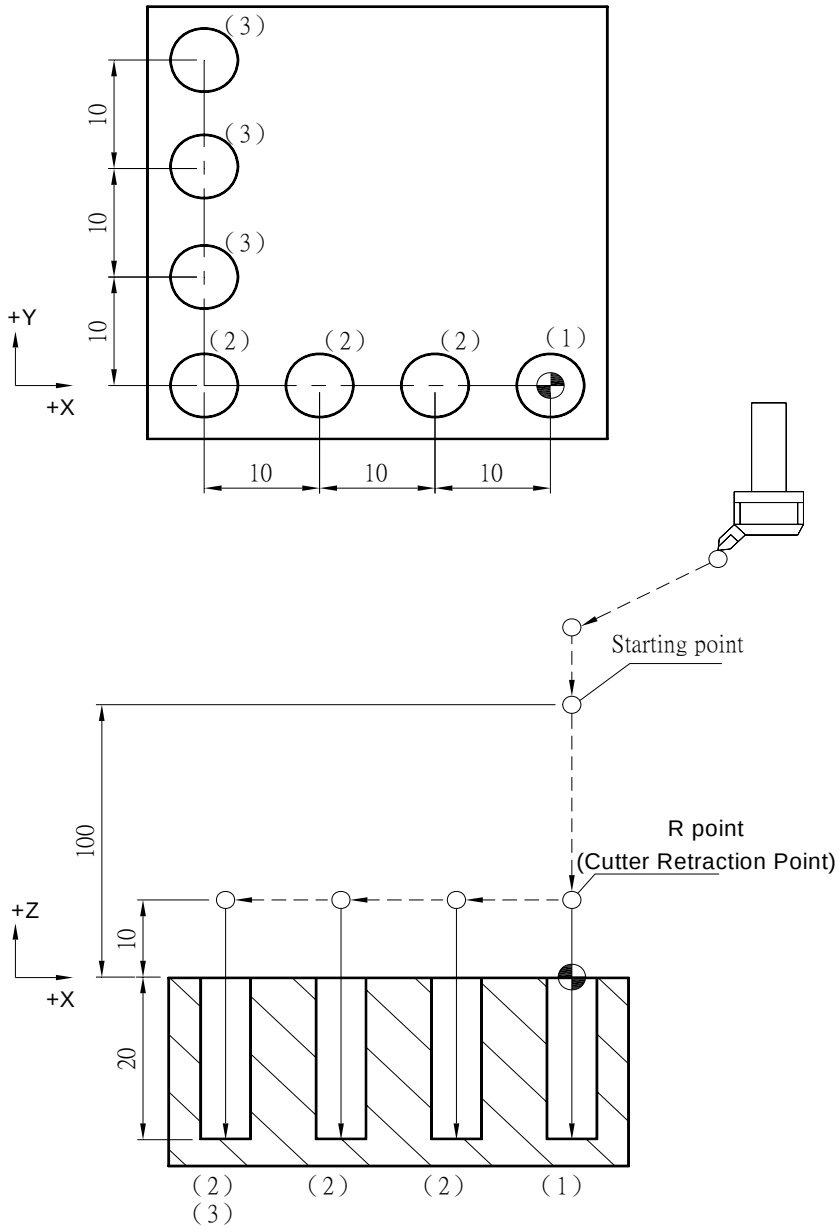

```
M03 S1000;
G17 G90 G00 G54 X0. Y0.;
G00 Z100.;
G98 G88 X0. Y0. Z-20. R10. P1000 K1 F100.; ---------- (1)
G91 X-10. K3; ---------- (2)
Y10.   K3; ---------- (3)
G80 G91 G28 X0. Y0. Z0.;
M05;
```

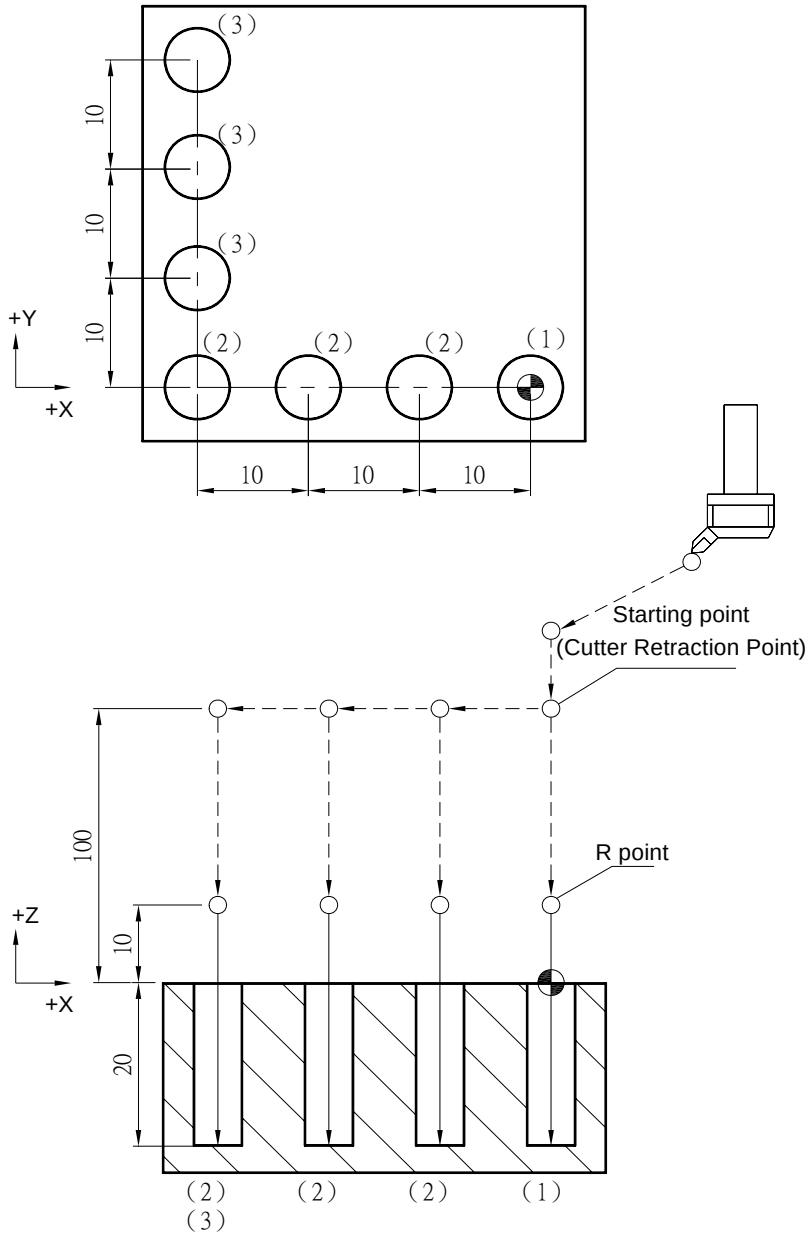

```
M03 S1000;
G17 G90 G00 G54 X0. Y0.;
G00 Z100.;
G99 G88 X0. Y0. Z-20. R10. P1000 K1 F100.; ---------- (1)
X-10. Z-30.; ---------- (2)
X20.   Z-40.; ---------- (3)
G80 G91 G28 X0. Y0. Z0.;
M05;
```

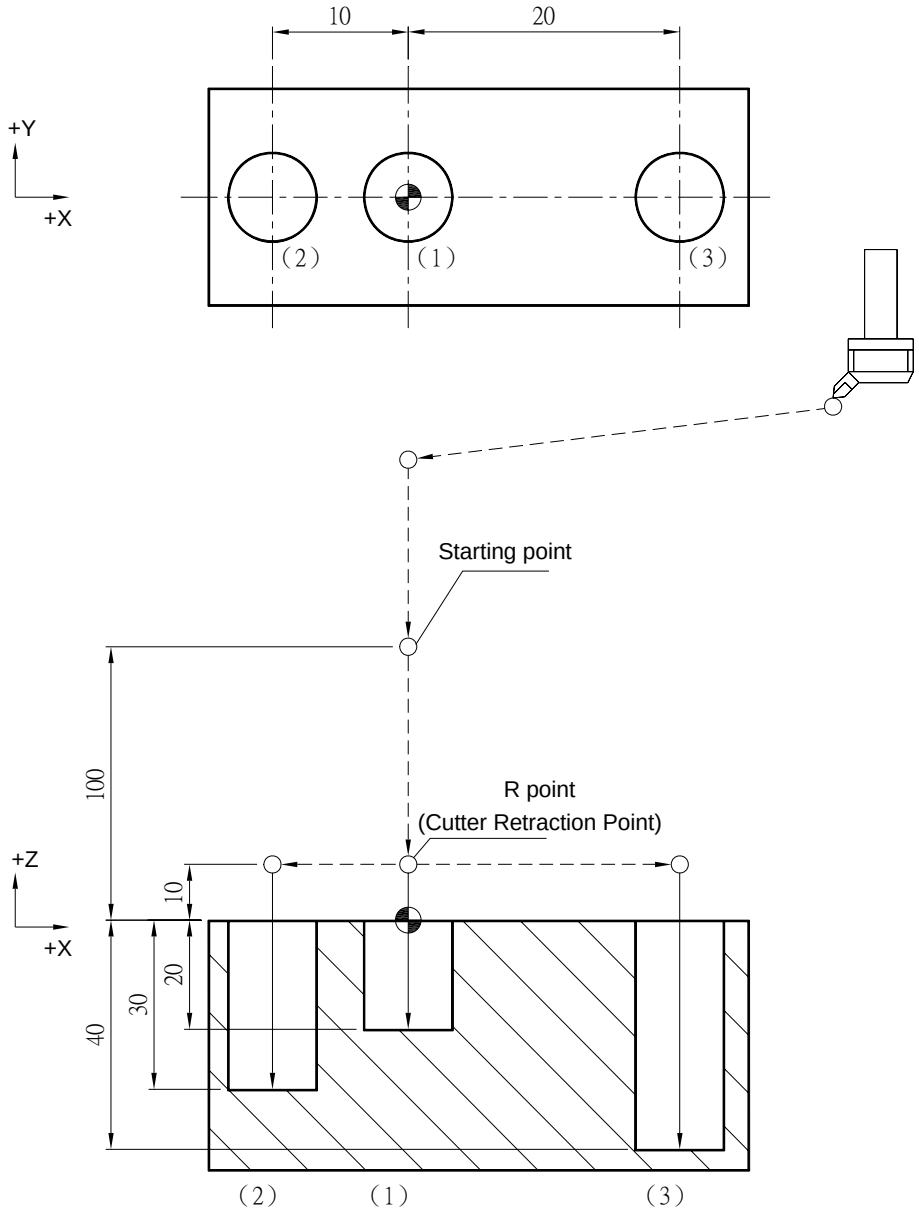

```
M03 S1000;
G17 G90 G00 G54 X0. Y0.;
G00 Z100.;
G98 G88 X0. Y0. Z-20. R10. P1000 K1 F100.; ---------- (1)
X-10. Z-30.; ---------- (2)
X20.   Z-40.; ---------- (3)
G80 G91 G28 X0. Y0. Z0.;
M05;
```

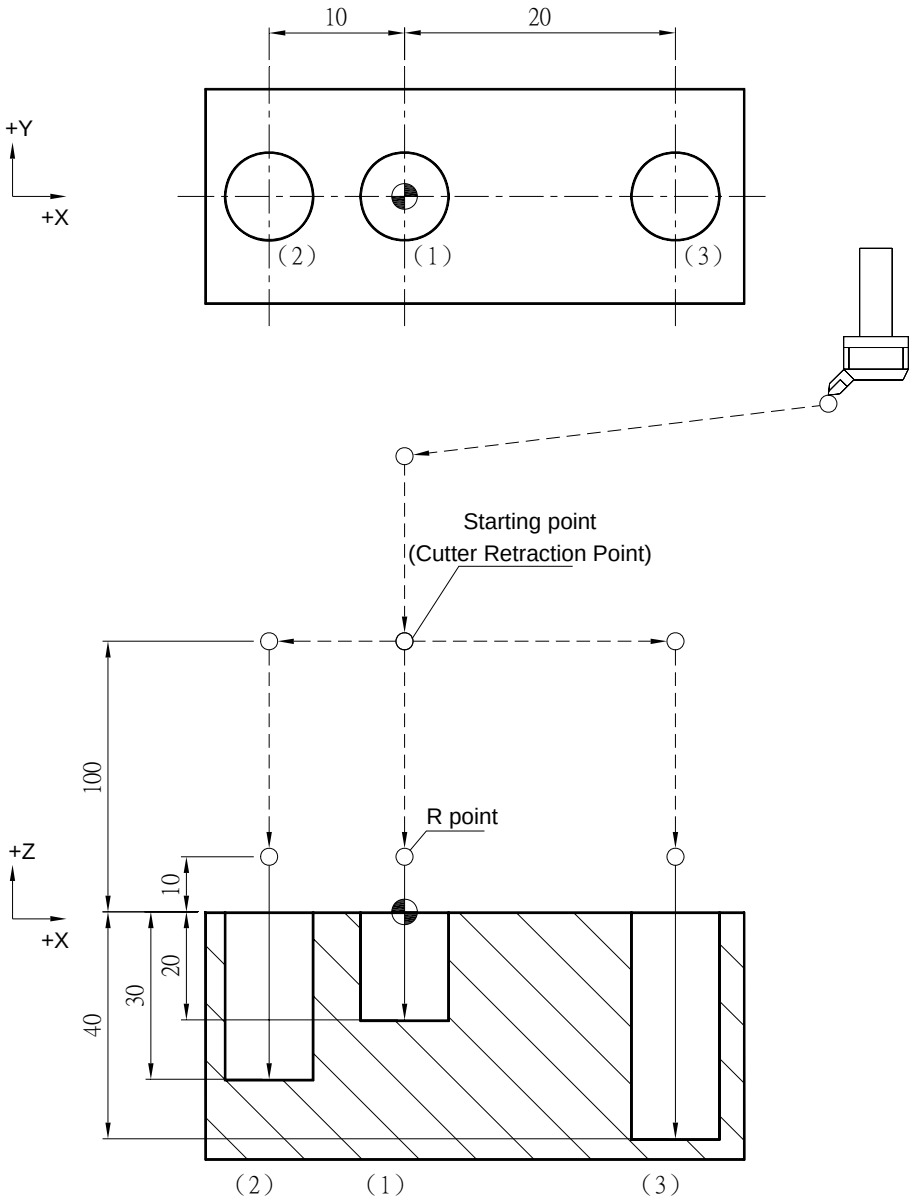

G89 Reaming Cycle

Command Format

```
G89 X__ Y__ Z__ R__ P__ K__ F__;
```

Argument Instruction

- X__Y__

  Coordinate of hole position (mm).

- Z__

  Coordinate of hole bottom (mm).

- R__

  Coordinate of R point (i.e. retraction point) (mm).

- P__

  Dwell time at hole bottom (1/1000 sec), minimum unit, decimal numbers are not allowed.

- K__

  Times of repetition.

- F__

  Cutting feedrate (G94 mm/min) (G95 mm/rev)

Action Instruction (taking G17 plane for example)

1. Fast position to hole position (X, Y, yet main tain original tool height);
2. Fast position to the coordinate of R point (R);
3. Cut to hole bottom position (Z) with specified cutting feedrate and spindle speed;
4. If P is specified, dwell at hole bottom for specified time;
5. In G98 mode, return to starting point at cutting feedrate; In G99 mode, return to R point at cutting feedrate；
6. If K is specified (> 1), repeat steps 2~5 until obtaining specified reaming repetition times; otherwise procedure ends;

7. In G91 mode, argument R specifies the distance between R point and the starting point; argument Z specifies the distance between hole bottom position and R point; If K is specified (> 1), after each reaming process (steps 2~5), the hole will migrate according to specified X, Y and then continue next reaming process.
8. The difference between G85 and G89 is that the latter can specify the dwell time at hole bottom.

Illustration

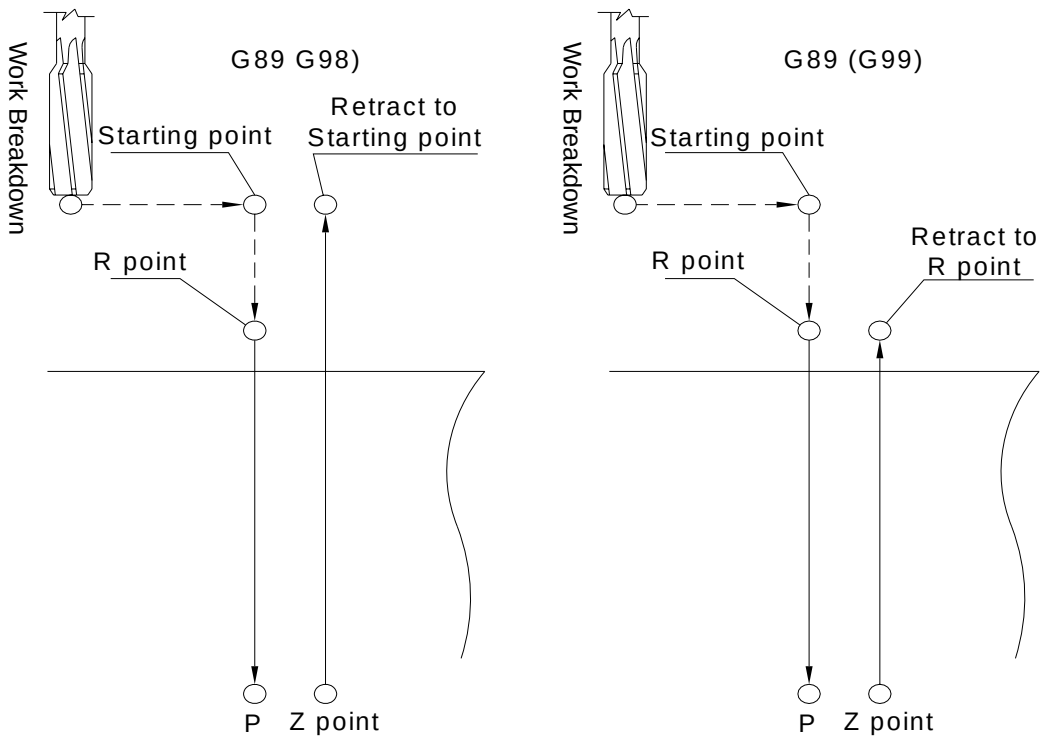

Program Sample

```
M03 S1000;
G17 G90 G00 G54 X0. Y0.;
G00 Z100.;
G99 G82 X0. Y0. Z-30. R10. P1000 K1 F100.; ---------- (1)
X-15.;---------- (2)
X-30.;---------- (3)
X-30. Y15.;---------- (4)
G80 G91 G28 X0. Y0. Z0.;
M05;
```

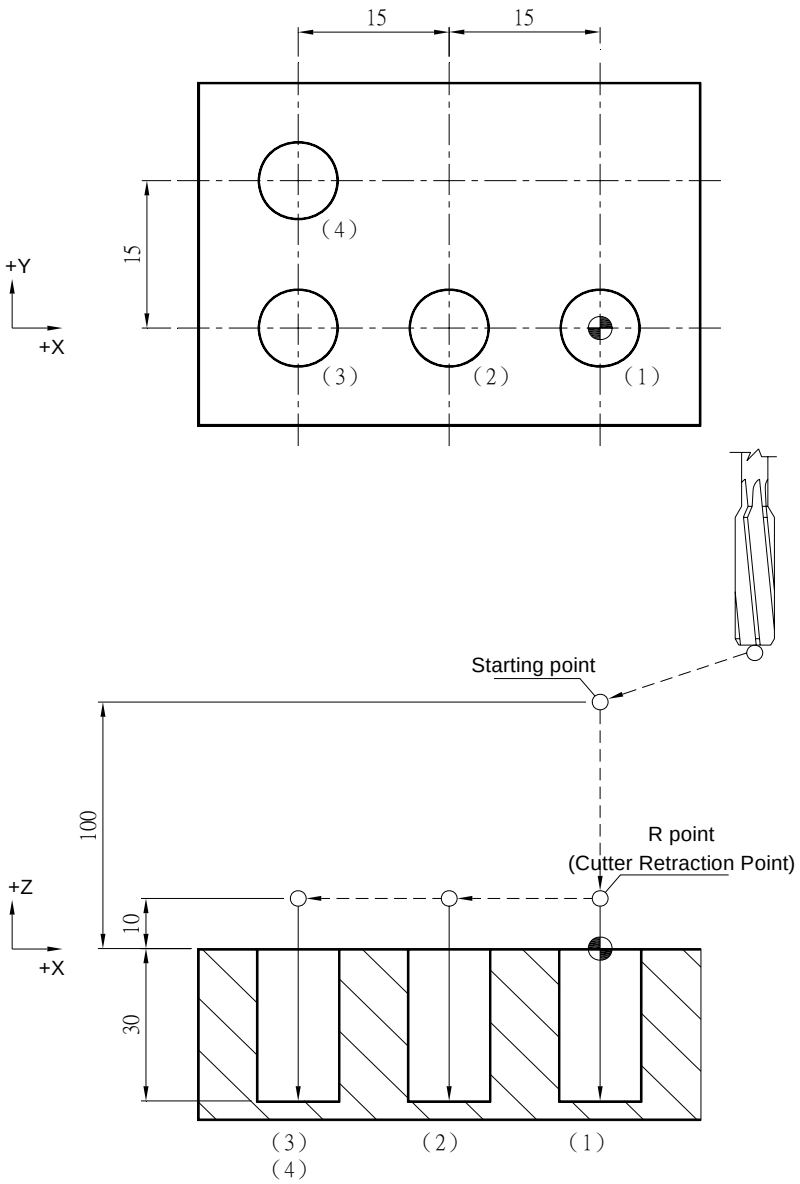

```
M03 S1000;
G17 G90 G00 G54 X0. Y0.;
G00 Z100.;
G98 G82 X0. Y0. Z-30. R10. P1000 K1 F100.; ---------- (1)
X-15.;---------- (2)
X-30.;---------- (3)
X-30. Y15.;---------- (4)
G80 G91 G28 X0. Y0. Z0.;
M05;
```

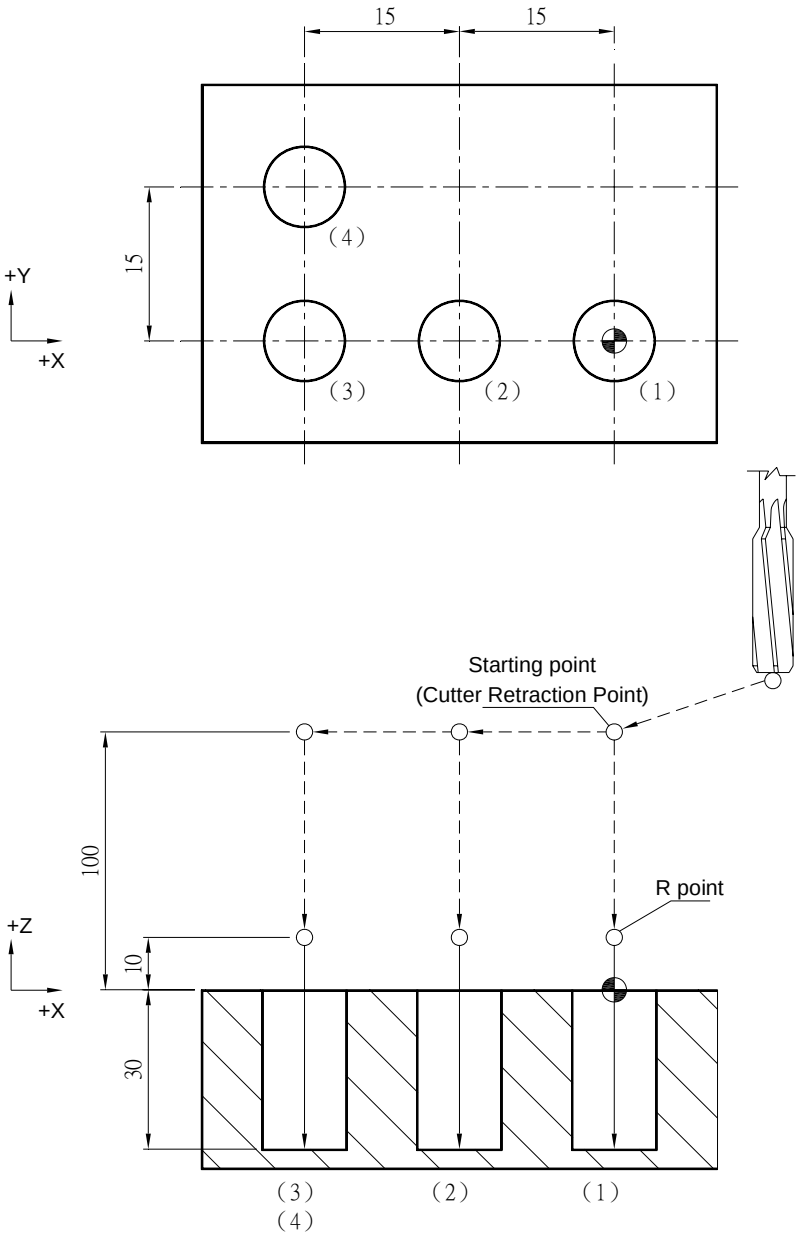

```
M03 S1000;
G17 G90 G00 G54 X0. Y0.;
G00 Z100.;
G99 G82 X0. Y0. Z-20. R10. P1000 K1 F100.; ---------- (1)
G91 X-10. K3; ---------- (2)
Y10.   K3; ---------- (3)
G80 G91 G28 X0. Y0. Z0.;
M05;
```

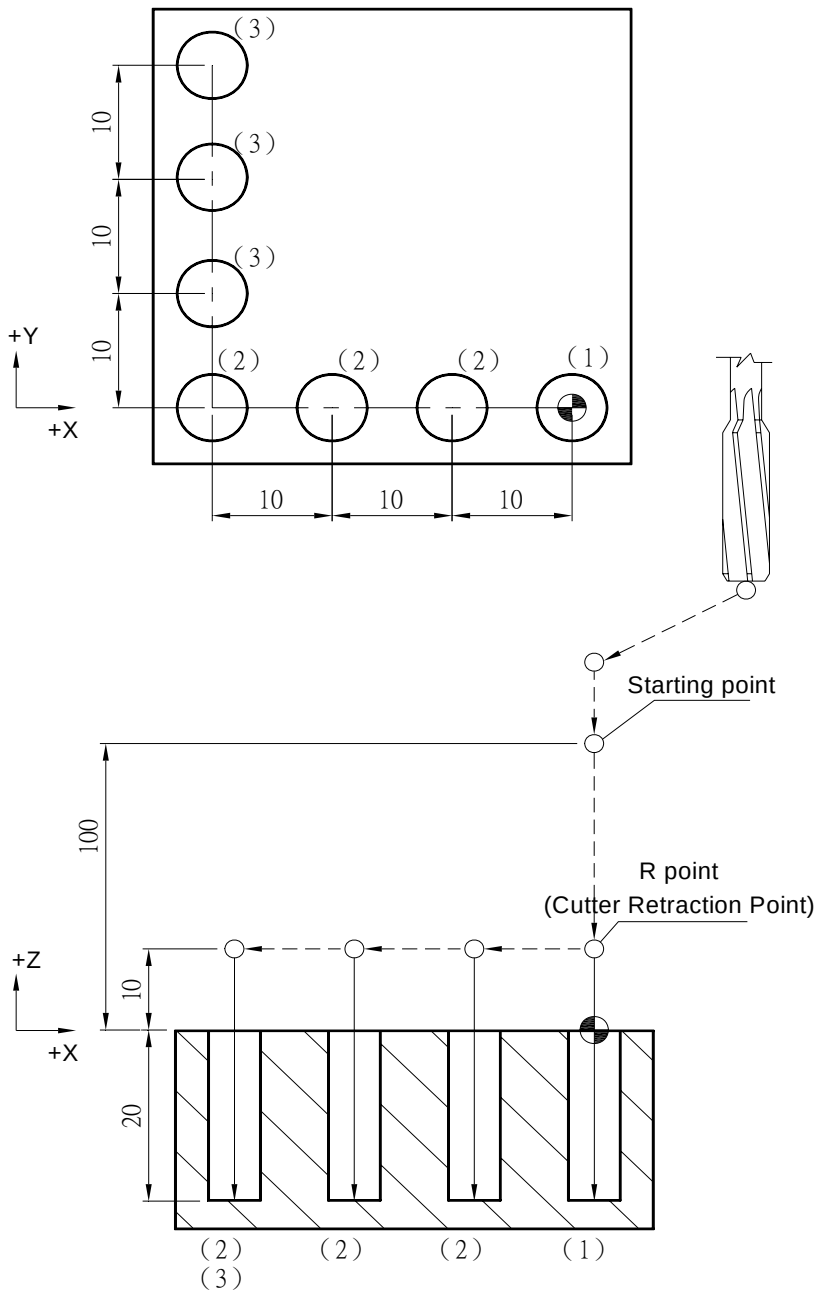

```
M03 S1000;
G17 G90 G00 G54 X0. Y0.;
G00 Z100.;
G98 G82 X0. Y0. Z-20. R10. P1000 K1 F100.; ---------------------------------------------------------- (1)
G91 X-10. K3; ---------------------------------------------------------------------------------------- (2)
Y10.   K3; ------------------------------------------------------------------------------------------- (3)
G80 G91 G28 X0. Y0. Z0.;
M05;
```

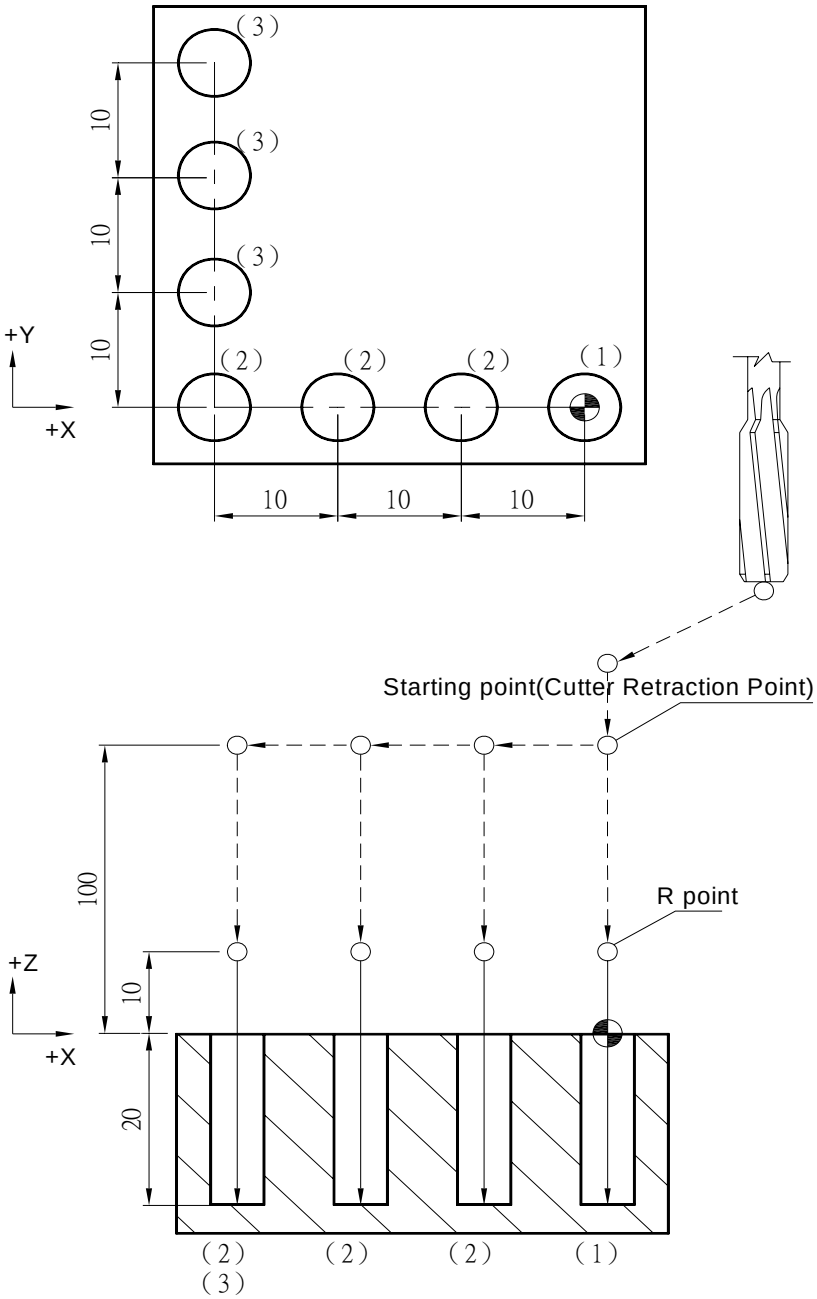

```
M03 S1000;
G17 G90 G00 G54 X0. Y0.;
G00 Z100.;
G99 G82 X0. Y0. Z-20. R10. P1000 K1 F100.; ---------- (1)
X-10. Z-30.; ---------- (2)
X20.   Z-40.; ---------- (3)
G91 G80 G28 X0. Y0. Z0.;
M05;
```

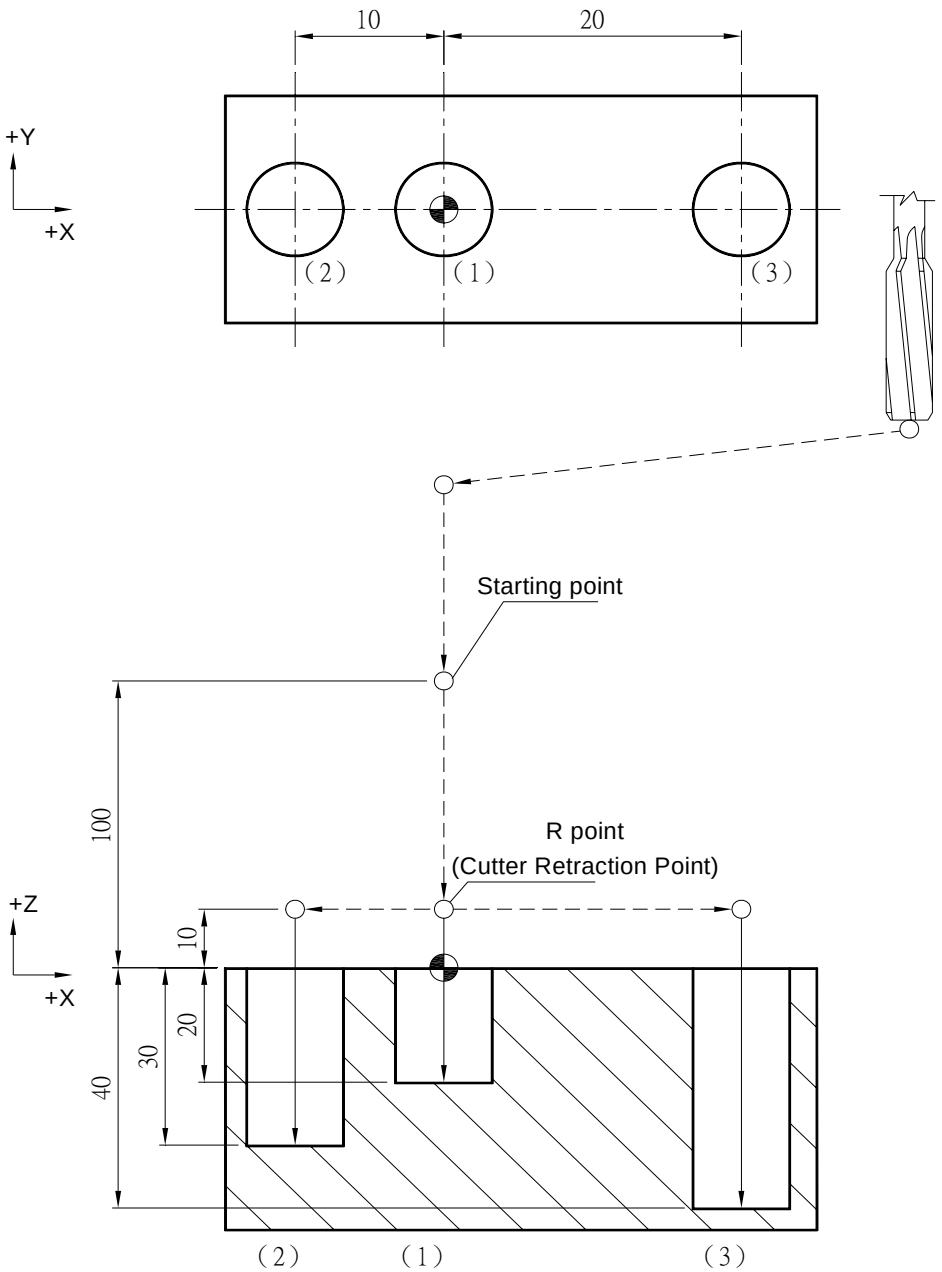

```
M03 S1000;
G17 G90 G00 G54 X0. Y0.;
G00 Z100.;
G98 G82 X0. Y0. Z-20. R10. P1000 K1 F100.; ---------- (1)
X-10. Z-30.; ---------- (2)
X20.   Z-40.; ---------- (3)
G80 G91 G28 X0. Y0. Z0.;
M05;
```

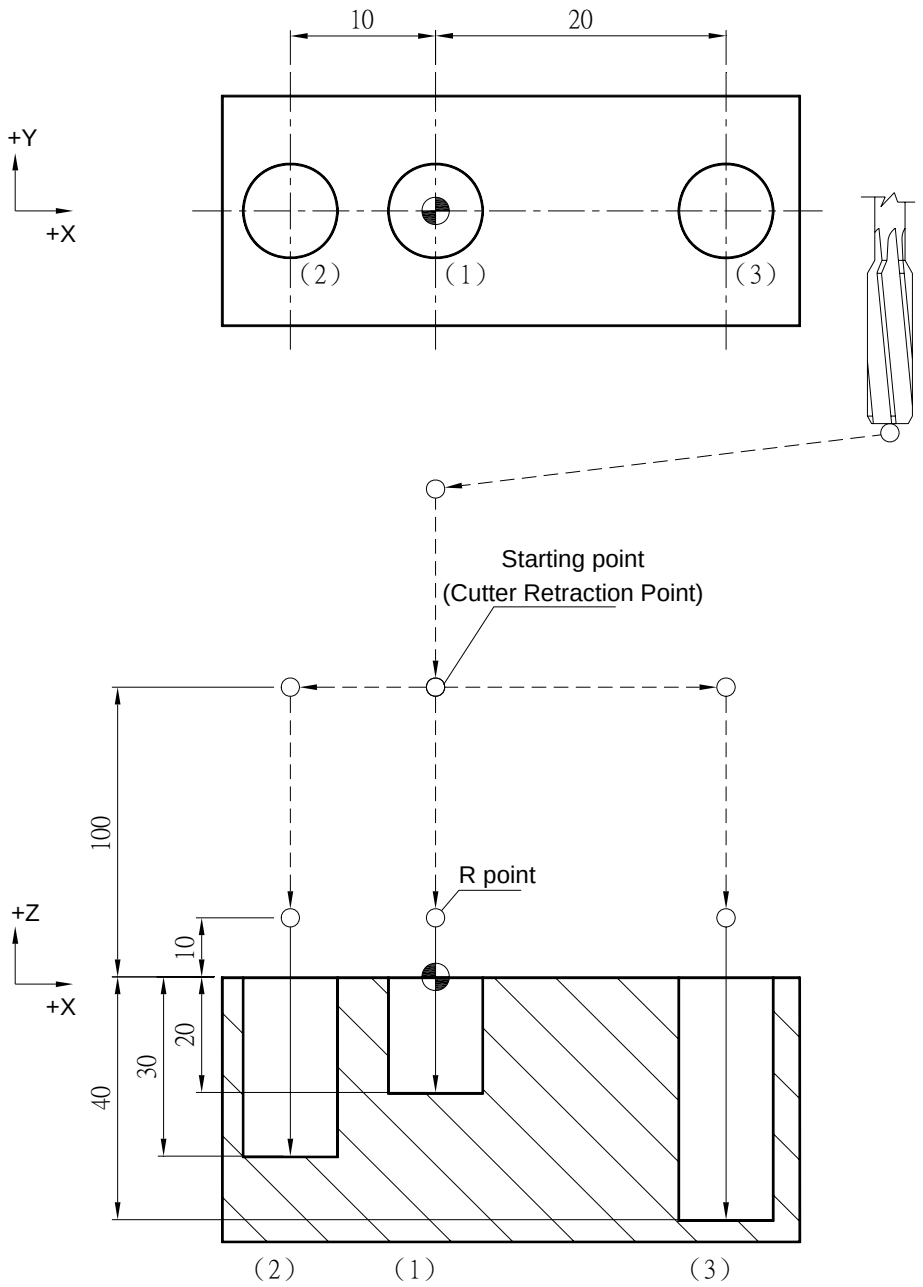

G90, G91 Absolute, Incremental Mode

Command Format

```
G90;
G91;
```

Argument Instruction

- G90

  Absolute mode: In this mode, workpiece program specifies the coordinate of target point..

- G91

  Incremental mode: In this mode, workpiece program specifies the movement distance to target point.

Program Sample

G90 X50. Y40.;	G91 X40. Y30.;
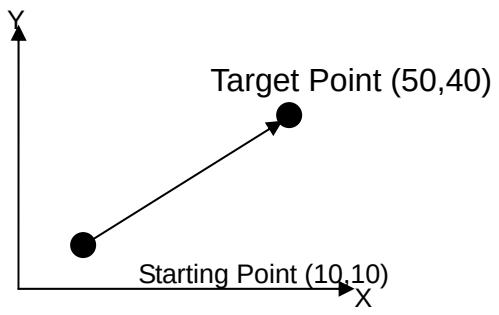	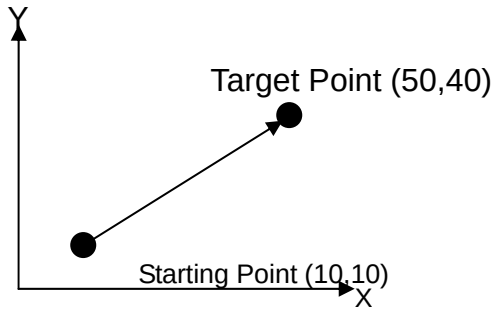

G92 Coordinate Setting

Command Format

G92 <Axis><new coordinate> S__;

Argument Instruction

- Axis Name
  Specify the name of axis being set. It can be any combination of X, Y, Z, A, B, C or U, V, W. The only condition is that it must be consistent with the setting of current axis name (the 4th axis is set by parameter #0122). On the six-axes model M600, parameters #0288 & #0289 are used to control the 5th & 6th axes.
- New Coordinate Value
  New coordinate value of the current tool position.
- S__
  Setup the maximum spindle speed. When it's done it will replace the setting of parameter #1096.

Action Instruction

G92 command sets up the current position as a specified coordinate, and the offset amount between new coordinate and old coordinate will affect all coordinate systems of G54~G59. Once G92 is set up, movement commands in absolute mode refer to the after-offset coordinate system to calculate. To cancel the offset made by G92, one has to manually run the zero point return procedures.

Program Sample

G90 G54 G00 X100. Y50.;---------- （A Point）

G92 X-50. Y-100.; --------- （lead to the offset of zero points in all coordinate systems (150,150)）

X100. Y50.; ---------- （A→B）

G55 G00 X50. Y50.; ---------- （B→C）

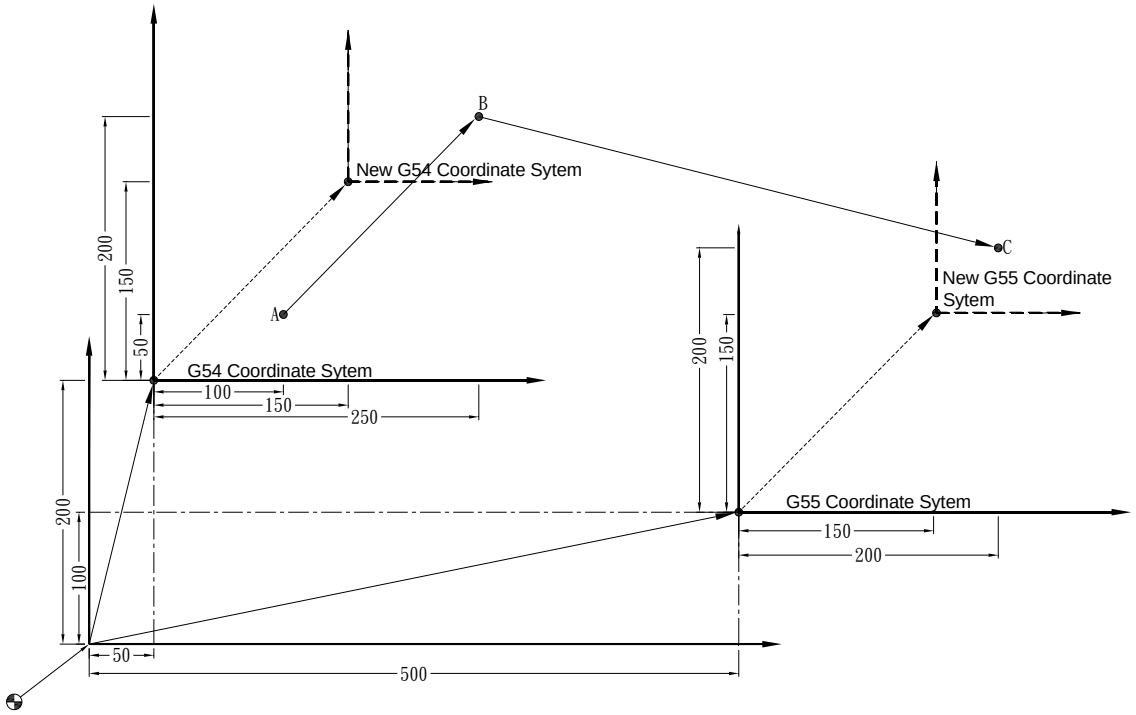
B
New G54 Coordinate Sytem
C
New G55 Coordinate Sytem
A
200
150
50
G54 Coordinate Sytem
100
150
250
200
150
G55 Coordinate Sytem
150
200
200
100
50
500

G94, G95 Feed Per Minute, Feed Per Revolution

Command Format

```
G94 F___;
G95 F___;
```

Argument Instruction

- G94

  Feed per minute, unit: mm/min or inch/min.

- G95

  Spindle feed per revolution, unit: mm/rev or inch/rev.

Action Instruction

They are used to set up the F-code's unit specified in cutting feed commands (G01/G02/G03).

G98, G99 Retraction Point Setting

Command Format

```
G98;
G99;
```

Argument Instruction

- G98

  In canned cycle cutting mode, specify retraction point as the starting point.

- G99

  In canned cycle cutting mode, specify retraction point as the R point.

Illustration

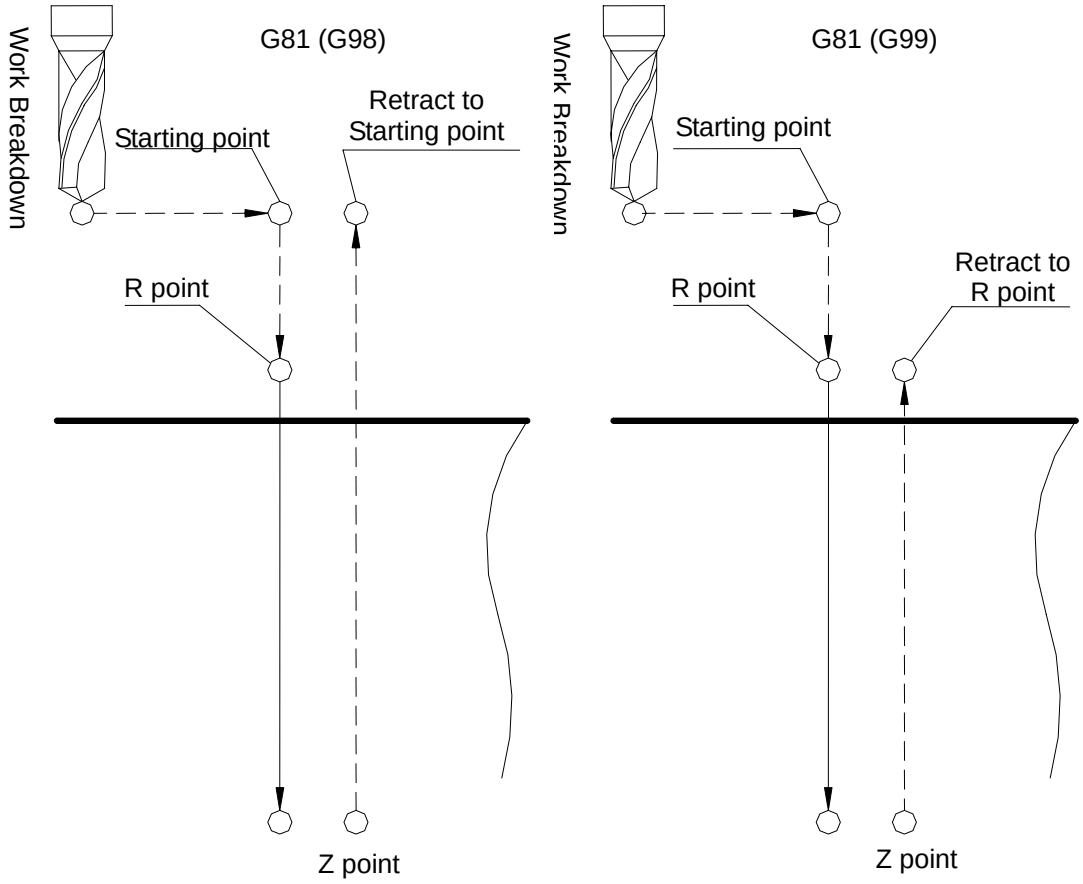

G100 Global variables Setting

Command Format

G100 C__ D__ E__ F__ R__ S__ K__;

Argument Instruction

Content of Program Code G100

Global variables Setting of Macro G100 Command					
Variable	Instruction	Note	Variable	Instruction	Note
A			O		
B			P		
C	Whether cutting width is fixed	1 : true 0 : false	Q		
D	Tool Diameter	mm	R	Percentage of each feed to tool diameter	%
E	Escape Amount	mm Z-axis (G90)	S	Spindle Speed	RPM
F	Feedrate	mm/min	T		
G			U		
H			V		
I			W		
J			X		
K	Tool Departure Position	1 : First Cutting Point 0 : Last Cutting Point (default)	Y		
L			Z		
M					
N					

G101~G105 Compound G-Code for Multi-hole Manufacturing

Command	Instruction	Illustratrion
G101	Linear Mode Multi-hole Manufacturing Cycle	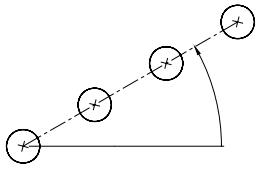
G102	Circular Mode Multi-hole Manufacturing Cycle	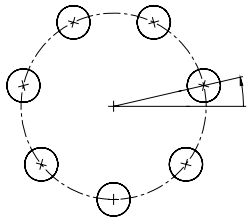
G103	Arc Mode Multi-hole Manufacturing Cycle	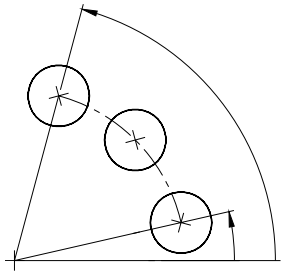
G104	Grid Mode Multi-hole Manufacturing Cycle	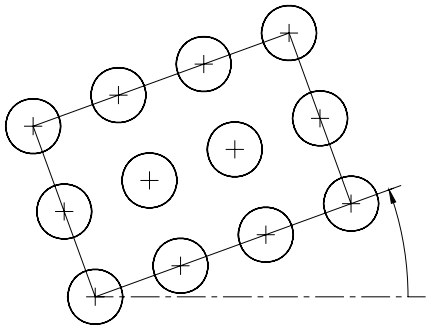
G105	Promiscous Mode Multi-hole Manufacturing Cycle	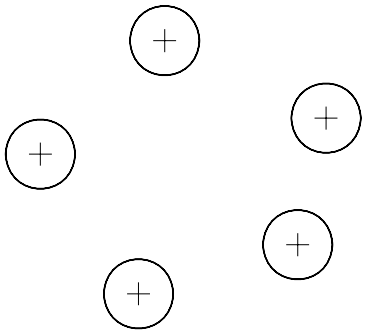

(Note) For more information, refer to latter portion of this section.

G101 Linear Mode Multi-hole Manufacturing Cycle

Command Format

```
G101 A__ B__ C__ F__ K__ M__ Q__ R__
S__ T__ V__ X__ Y__ Z__;
```

Argument Instruction

- A__

  Angle between manufacturing axis and ＋X-axis.

- B__

  Distance between holes (pitch of hole) (mm).

- C__

  Number of holes being manufactured.

- F__

  Manufacturing feedrate (mm/min).

- K__

  Times of repetition of manufacturing (argument M be 1~4);

  In tapping mode (argument M be 5), for assigning left-handed or right-handed screw thread tapping, where 0 denotes right-handed screw thread tapping, and 1 denotes left-handed screw thread tapping.

- M__

  Cutting Mode

  1 : G73 high speed peck drilling cycle;

  2 : G83 peck drilling cycle;

  3 : G85 reaming cycle;

  4 : G89 reaming cycle;

5 : tapping cycle (G74/G84, specified by argument K); if parameter #0810 be 1, it's rigid tapping; if parameter #0810 be 0, it's normal tapping.

- Q__

Depth of feed each time (mm)(argument M be 1~4);

In tapping mode (argument M be 5), it's for assigning Metric thread (M, MF) or British thread (BSW, BSF), 0 denotes Metric, and 1 denotes British.

- R__

Manufacturing cycle return R point (mm).

- S__

Spindle speed (RPM).

- T__

Dwell time at hole bottom (1/1000 sec), minimum unit, decimal numbers are not allowed.

- V__

Retrace amount per manufacturing (mm)(argument M be 1~4);

In tapping mode (argument M be 5), it's for assigning the pitch.

- X__

Reference point of X-axis (mm).

- Y__

Reference point of Y-axis (mm).

- Z__

Coordinate of the hole bottom (mm).

Program Sample

```
G90 G00 G54 X0. Y0. Z150. ;
G100 D6. E30.;
G101 M1 F100. S1000 R10. Z-10. Q4. V2. K1 X0. Y0. A15. B10. C4;
G91 G00 G28 X0. Y0. Z0.;
M05;
```

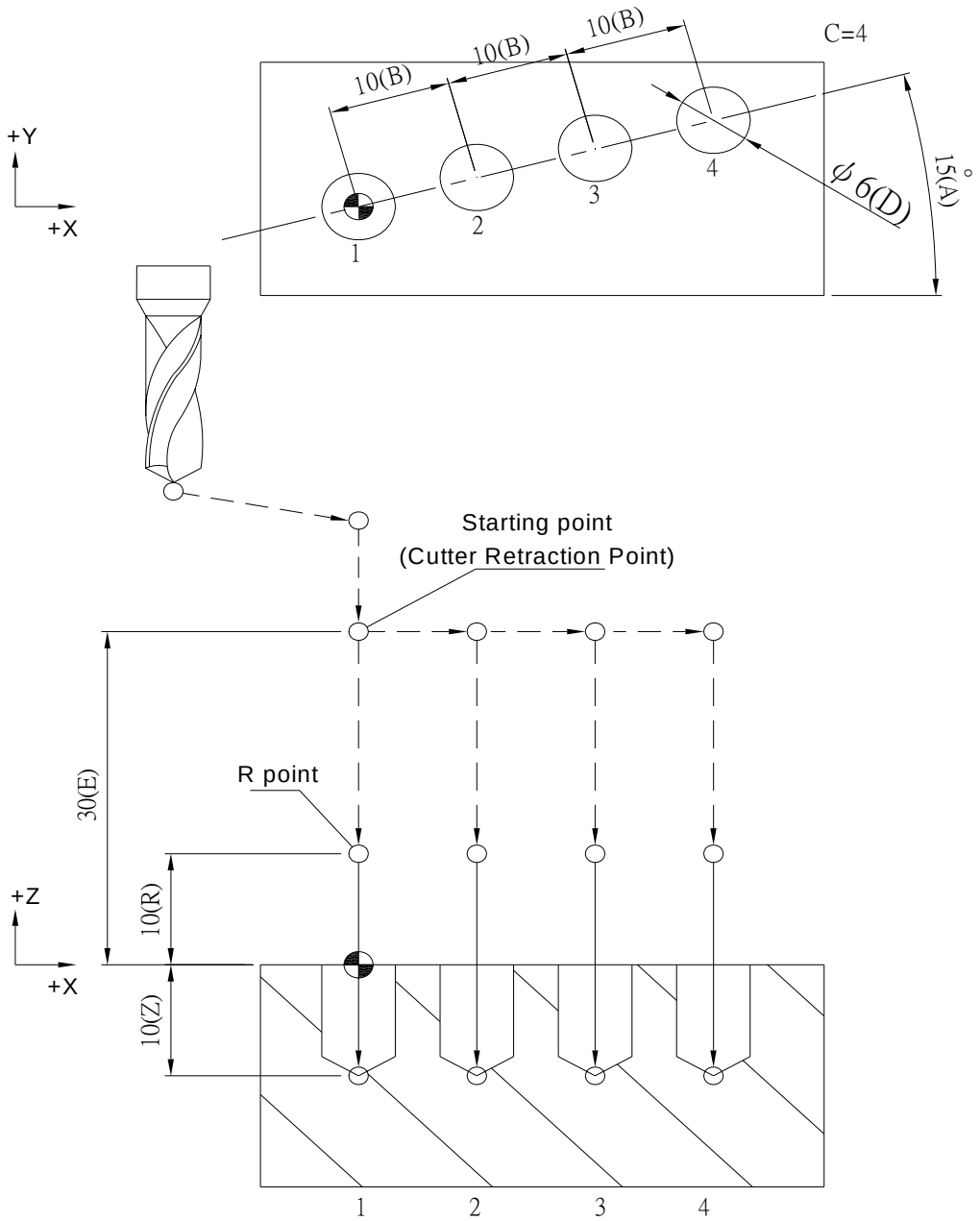

G90 G00 G54 X0. Y0. Z150.;

G100 D8. E20.;

G101 M2 F100. S1000 R10. Z-20. Q5. V1. K1 X0. Y0. A30. B15. C4;

G91 G00 G28 X0. Y0. Z0.;

M05;

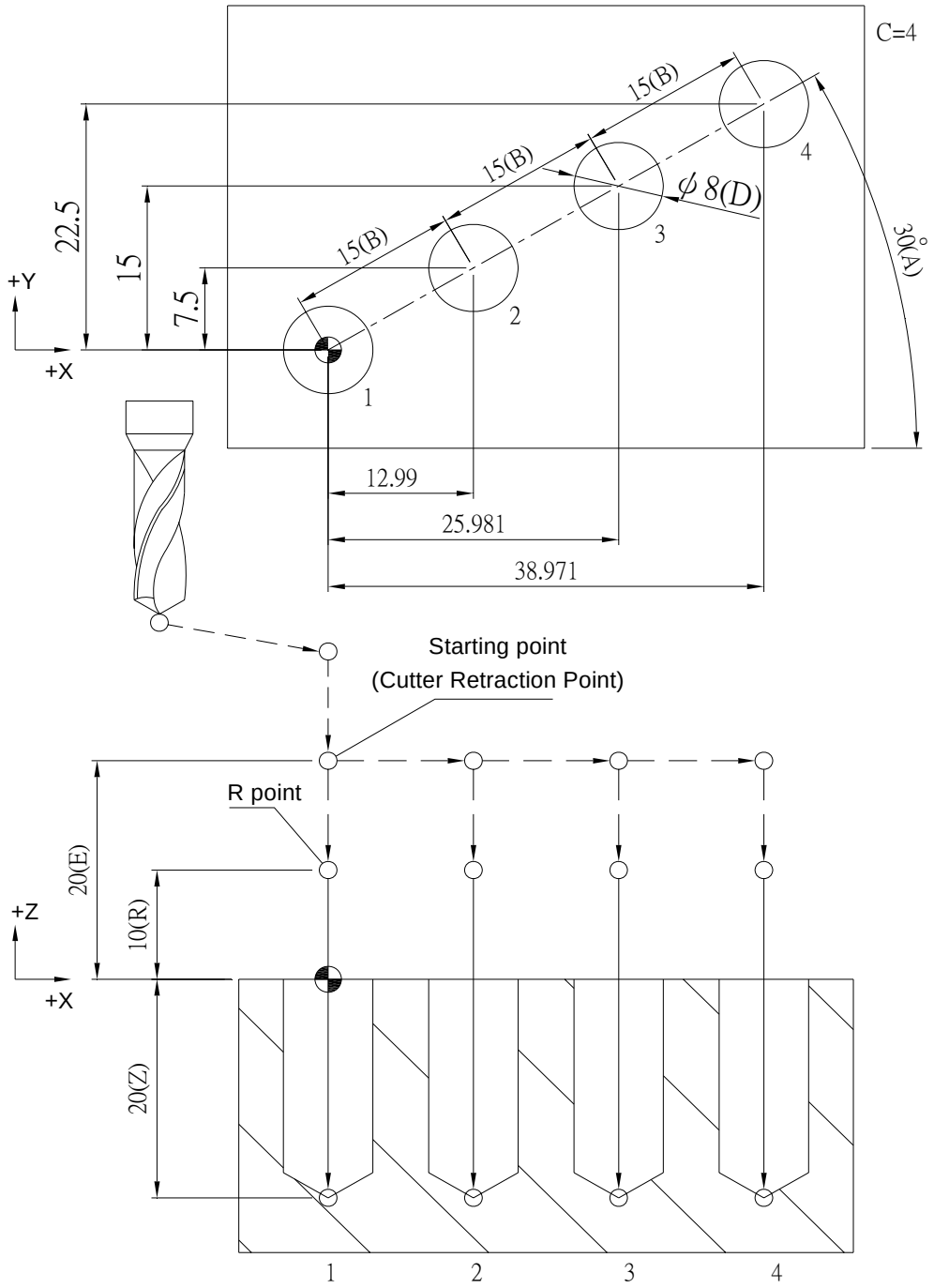

G90 G00 G54 X0. Y0. Z150.;

G100 D8 E30;

G101 M3 F100. S1000 R10. Z-20. K1 X0. Y0. A60. B20. C5;

G91 G00 G28 X0. Y0. Z0.;

M05;

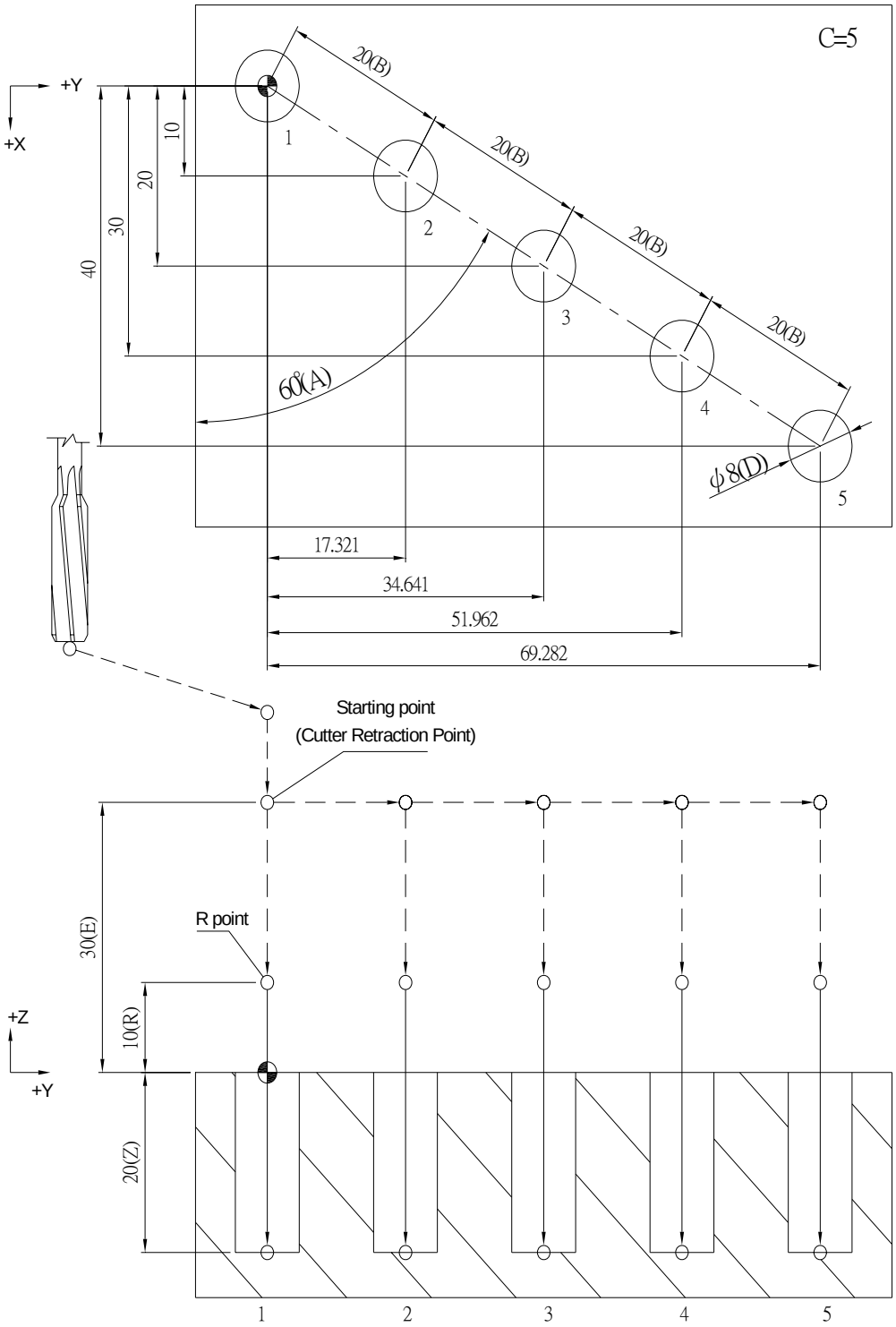

G90 G00 G54 X0. Y0. Z150.;

G100 D10. E40.;

G101 M4 F100. S1000 R10. Z-20. T1000 K1 X0. Y0. A90. B20. C5;

G91 G00 G28 X0. Y0. Z0.;

M05;

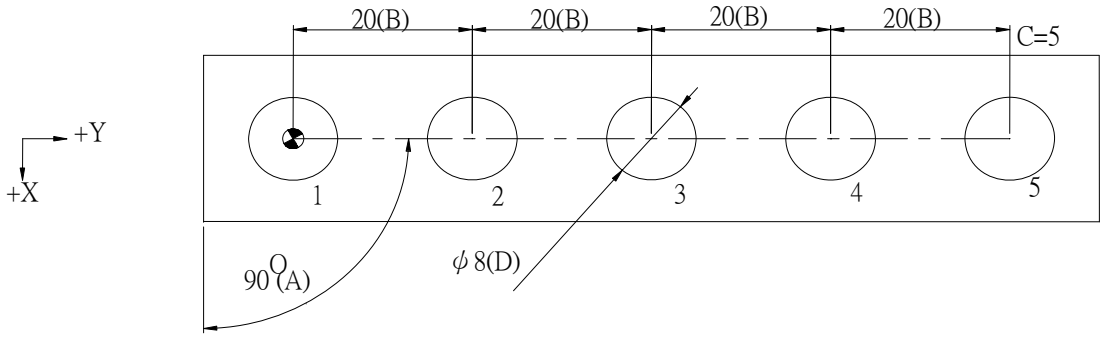

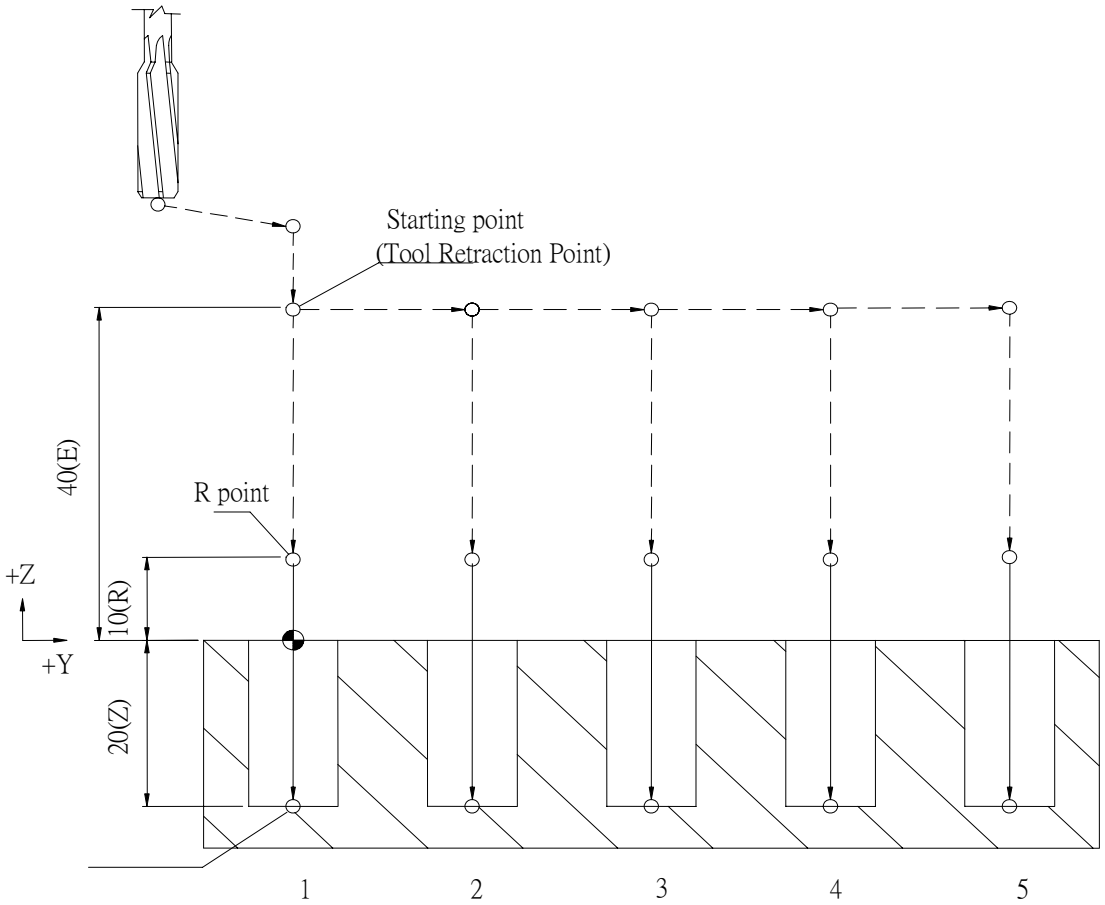

G90 G00 G54 X0. Y0. Z150.;

M29;

G100 D5. E50.;

G101 M5 S1000 R20. Z-30. Q0 V1.25 T1000 K0 X0. Y0. A180. B20. C5

M28;

G91 G00 G28 X0. Y0. Z0.;

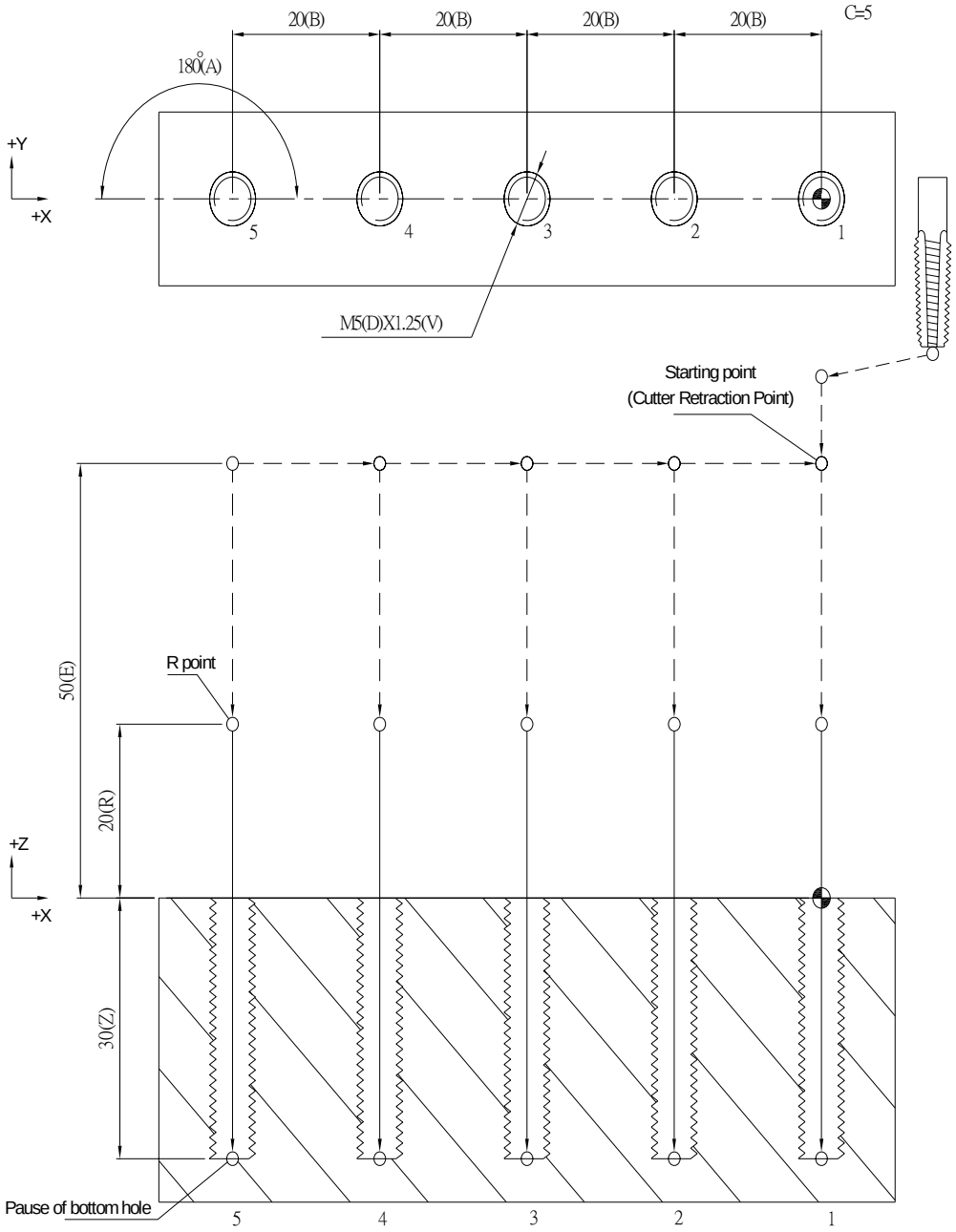

G102 Circular Mode of Multi-hole Manufacturing Cycle

Command Format

```
G102 A__ B__ C__ F__ K__ M__ Q__ R__ S__
     T__ V__ X__ Y__ Z__;
```

Argument Instruction

- A__

  Angle between manufacturing axis and ＋X-axis.

- B__

  Radius of manufacturing circumference (mm)

- C__

  Number of holes being manufactured.

- F__

  Manufacturing feedrate (mm/min).

- K__

  Manufacturing repetition times (argument M be 1~4);

  In tapping mode (argument M be 5), it's for assigning left-handed or right-handed screw thread tapping, 0 denotes right-handed thread tapping, and 1 denotes left-handed thread tapping.

- M__

  Cutting Mode

  1 : G73 high speed peck drilling cycle;

  2 : G83 peck drilling cycle;

  3 : G85 reaming cycle;

  4 : G89 reaming cycle;

5 : tapping cycle (G74/G84, specified by argument K); if parameter #0810 be 1, it's rigid tapping; if parameter #0810 be 0, it's normal tapping.

- Q__

  Depth of feed per time (mm) (argument M be 1~4);

  In tapping mode (argument M be 5), it's for assigning Metric thread (M, MF) or British thread (BSW, BSF), 0 denotes Metric, and 1 denotes British.

- R__

  Manufacturing cycle return R point (mm).

- S__

  Spindle speed (RPM).

- T__

  Dwell time at hole bottom (1/1000 sec), minimum unit, decimal numbers are not allowed.

- V__

  Retrace amount per manufacturing (mm)(argument M be 1~4);

  In tapping mode (argument M be 5), it's for assigning the pitch.

- X__

  Reference point of X-axis (mm).

- Y__

  Reference point of Y-axis (mm).

- Z__

  Coordinate of the hole bottom (mm).

Program Example :

```
G90 G00 G54 X0. Y0. Z150.;
G100 D6. E30.;
G102 M1 F100. S1000 R10. Z-10. Q4. V1. K1 X0. Y0. A15. B20. C4;
G91 G00 G28 X0. Y0. Z0.;
M05;
```

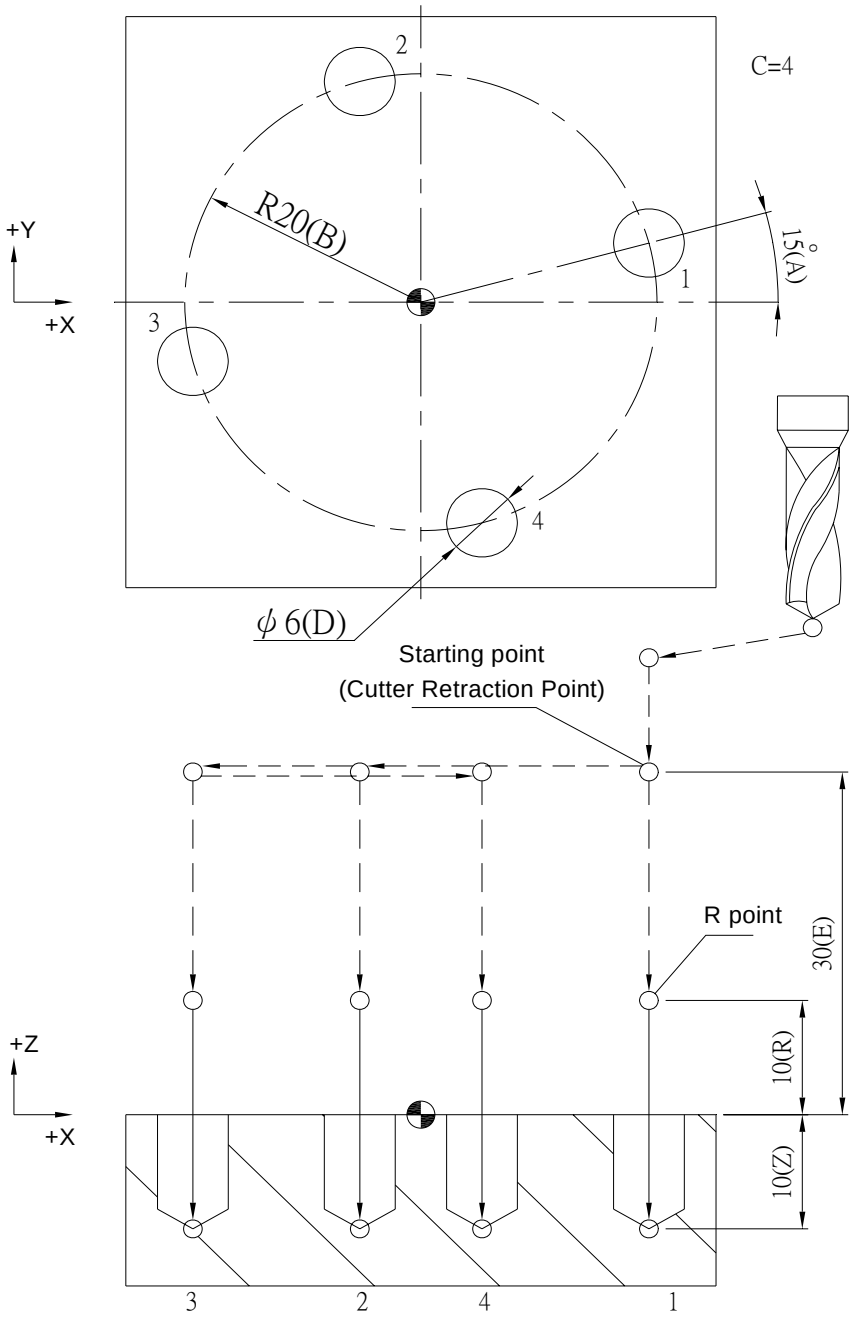

G90 G00 G54 X0. Y0. Z150.;

G100 D4. E30.;

G102 M2 F100. S1000 R10. Z-20. Q5. V2. K1 X0. Y0. A30. B15. C4;

G91 G00 G28 X0. Y0. Z0.;

M05;

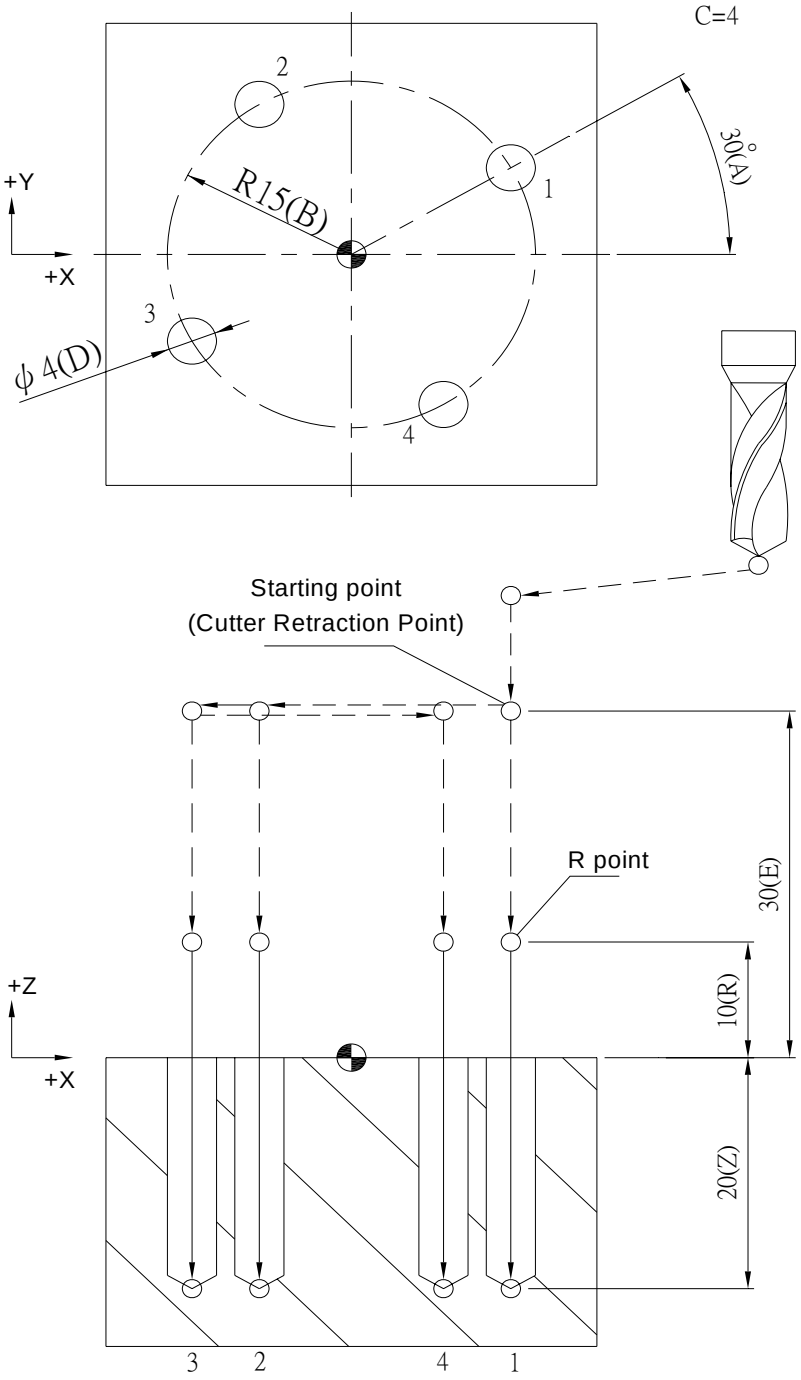

G90 G00 G54 X0. Y0. Z150.;

G100 D6. E30.;

G102 M3 F100. S1000 R10. Z-20. K1 X0. Y0. A60. B20. C4;

G91 G00 G28 X0. Y0. Z0.;

M05;

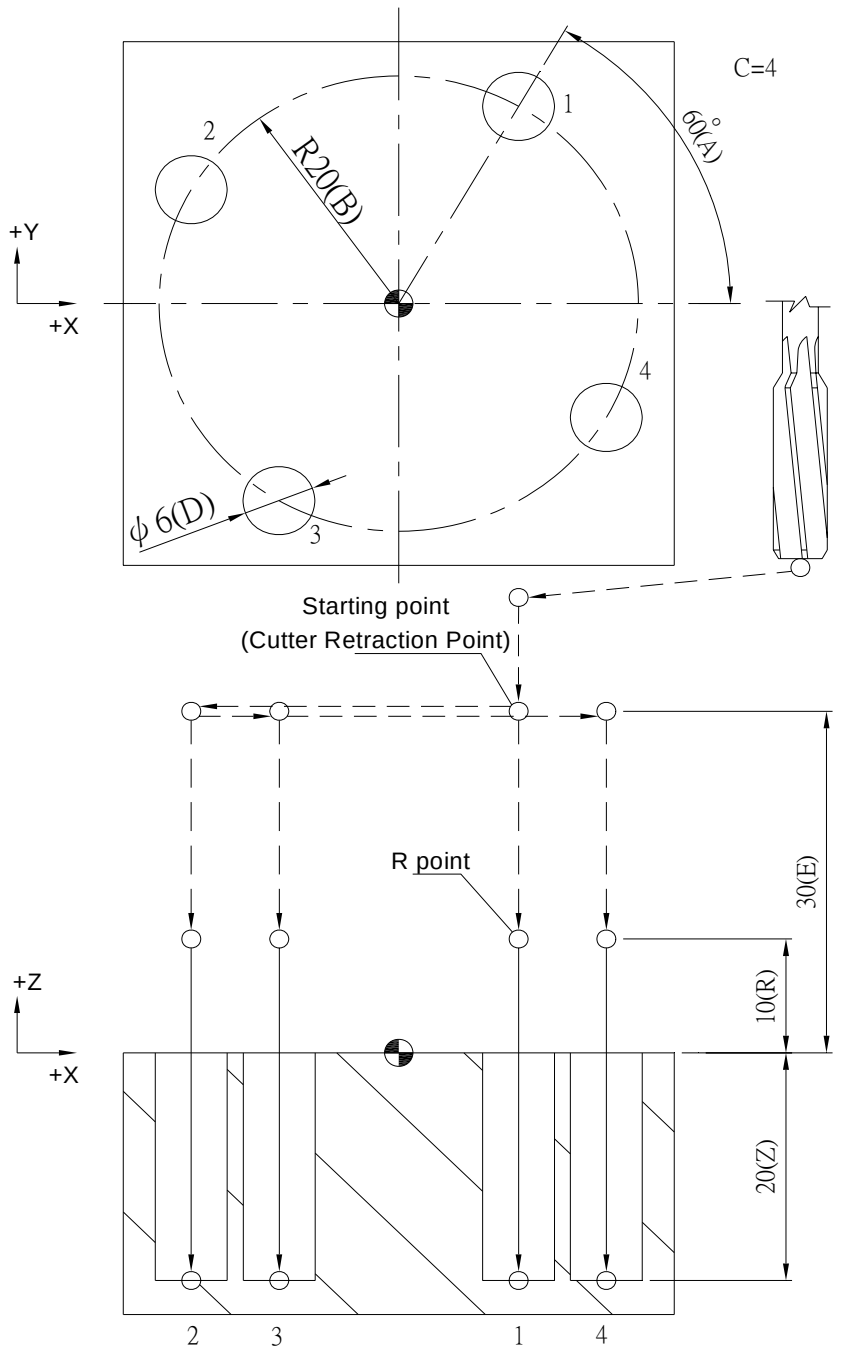

G90 G00 G54 X0. Y0. Z150.;

G100 D8. E30.;

G102 M4 F100. S1000 R10. Z-20. T1000 K1 X0. Y0. A90. B15. C4;

G91 G00 G28 X0. Y0. Z0.;

M05;

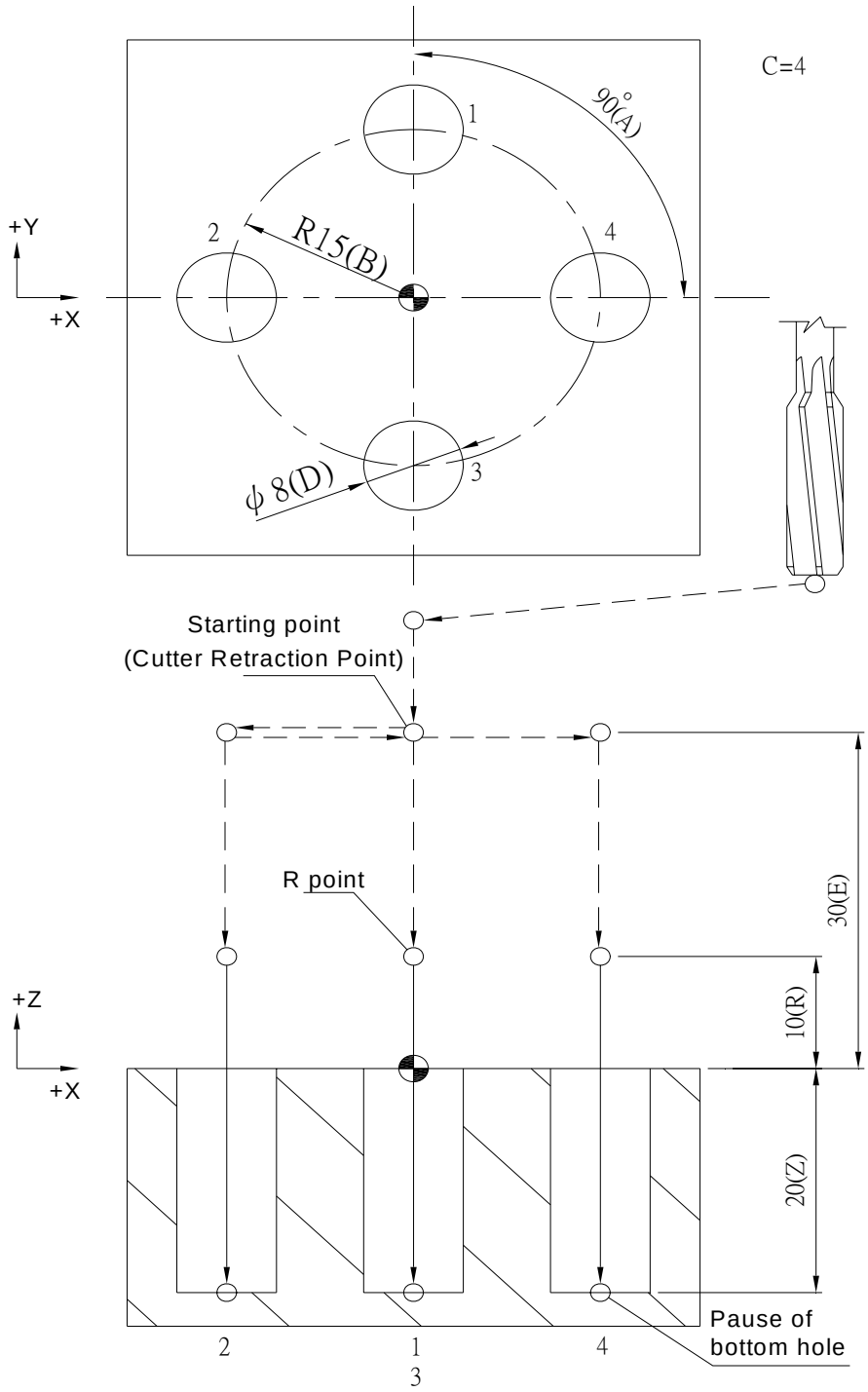

G90 G00 G54 X0. Y0. Z150.;

M29;

G100 D8. E50.;

G102 M5 S1000 R20 Z-30. Q0 V1.25 T1000 K0 X0. Y0. A180. B10. C4;

M28;

G91 G00 G28 X0. Y0. Z0.;

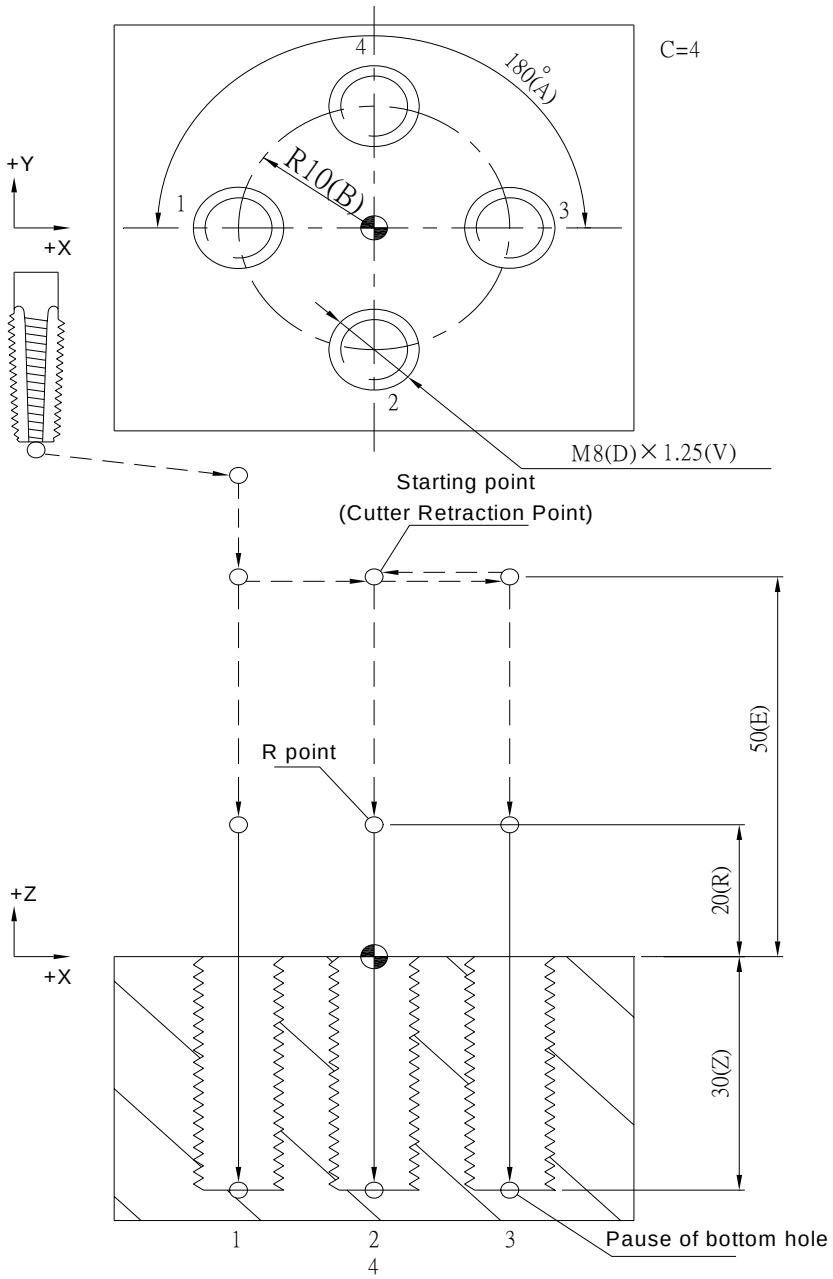

G103 Arc Mode of Multi-hole Manufacturing Cycle

Command Format

```
G103 A__ B__ C__ E__ F__ K__ M__ Q__ R__
S__ T__ V__ X__ Y__ Z__;
```

Argument Instruction

- A__

  Angle between manufacturing axis and ＋X-axis.

- B__

  Radius of manufacturing circumference (mm)

- C__

  Number of holes being manufactured.

- E__

  Manufacturing angle of last hole.

- F__

  Manufacturing feedrate (mm/min).

- K__

  Manufacturing repetition times (argument M be 1~4);

  In tapping mode (argument M be 5), it's for assigning left-handed or right-handed screw thread tapping, 0 denotes right-handed thread tapping, and 1 denotes left-handed thread tapping.

- M__

  Cutting Mode

  1 : G73 high speed peck drilling cycle;

  2 : G83 peck drilling cycle;

3 : G85 reaming cycle;

4 : G89 reaming cycle;

5 : tapping cycle (G74/G84, specified by argument K); if parameter #0810 be 1, it's rigid tapping; if parameter #0810 be 0, it's normal tapping.

- Q__

  Depth of feed per time (mm) (argument M be 1~4);

  In tapping mode (argument M be 5), it's for assigning Metric thread (M, MF) or British thread (BSW, BSF), 0 denotes Metric, and 1 denotes British.

- R__

  Manufacturing cycle return R point (mm).

- S__

  Spindle speed (RPM).

- T__

  Dwell time at hole bottom (1/1000 sec), minimum unit, decimal numbers are not allowed.

- V__

  Retrace amount per manufacturing (mm)(argument M be 1~4);

  In tapping mode (argument M be 5), it's for assigning the pitch.

- X__

  Reference point of X-axis (mm).

- Y__

  Reference point of Y-axis (mm).

- Z__

  Coordinate of the hole bottom (mm).

Program Sample

```
G90 G00 G54 X0. Y0. Z150.;
G100 C0 D6. E30.;
G103 M1 F100. S1000 R10. Z-10. Q4. V1. T1000 K1 X0. Y0. A5 E85 B20 C2;
G91 G00 G28 X0. Y0. Z0.;
M05;
```

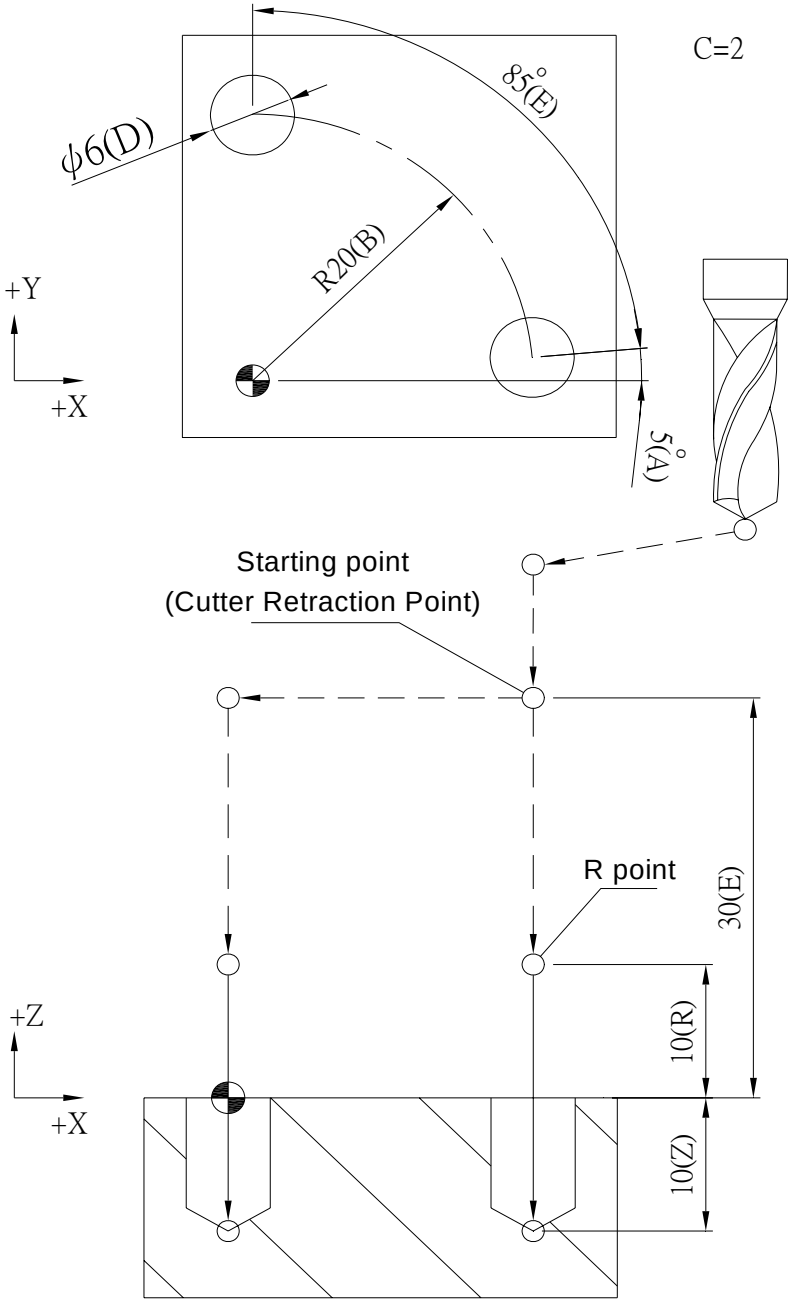

G90 G00 G54 X0. Y0. Z150.;

G100 C0 D6. E30.;

G103 M2 F100. S1000 R10. Z-20. Q5. V2. T1000 K1 X0. Y0. A0 E180 B15 C3;

G91 G00 G28 X0. Y0. Z0.;

M05;

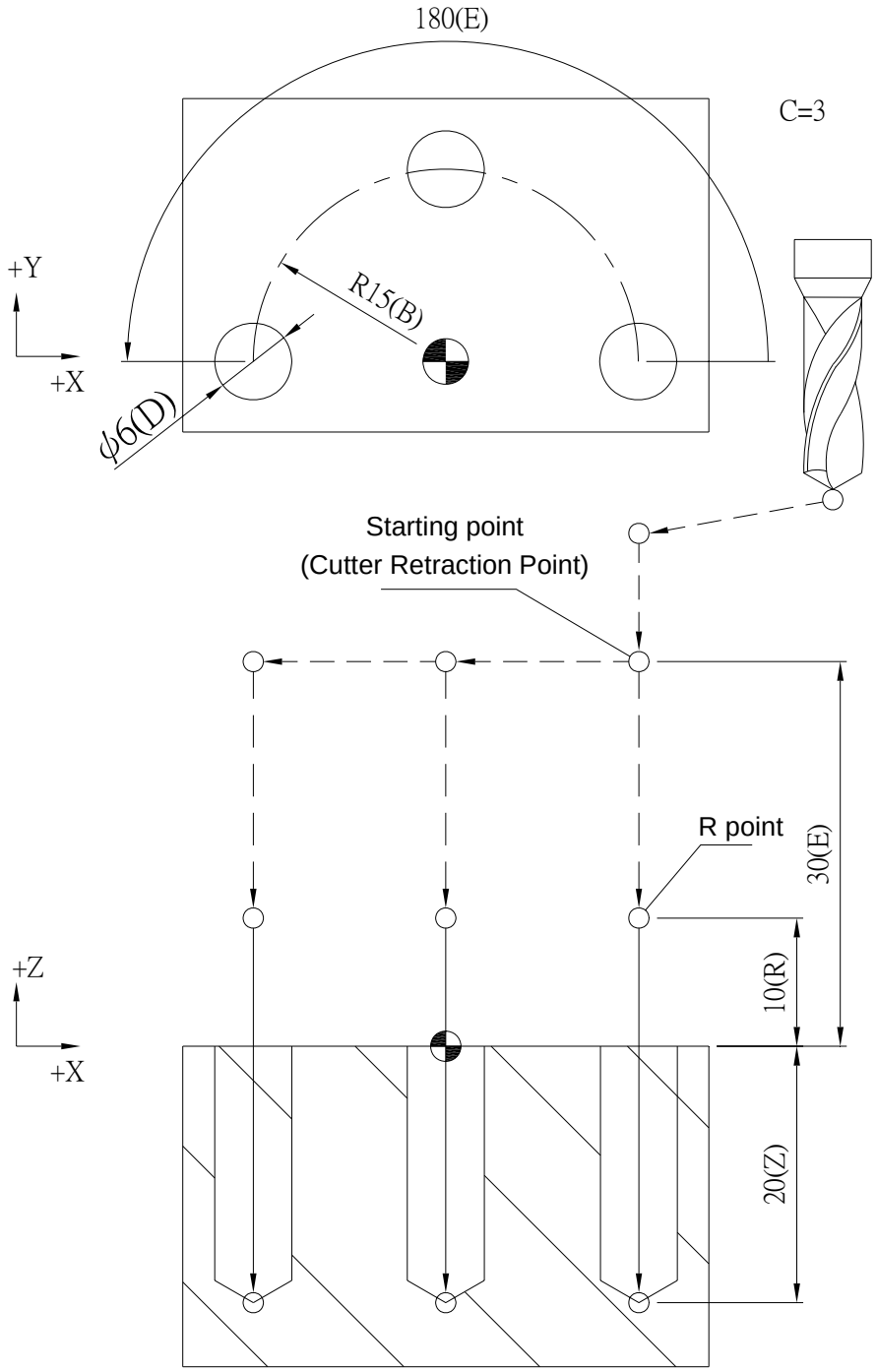

G90 G00 G54 X0. Y0. Z150.;

G100 C0 D6. E30.;

G103 M3 F100. S1000 R10. Z-20. T1000 K1 X0. Y0. A90 E360 B15 C4;

G91 G00 G28 X0. Y0. Z0.;

M05;

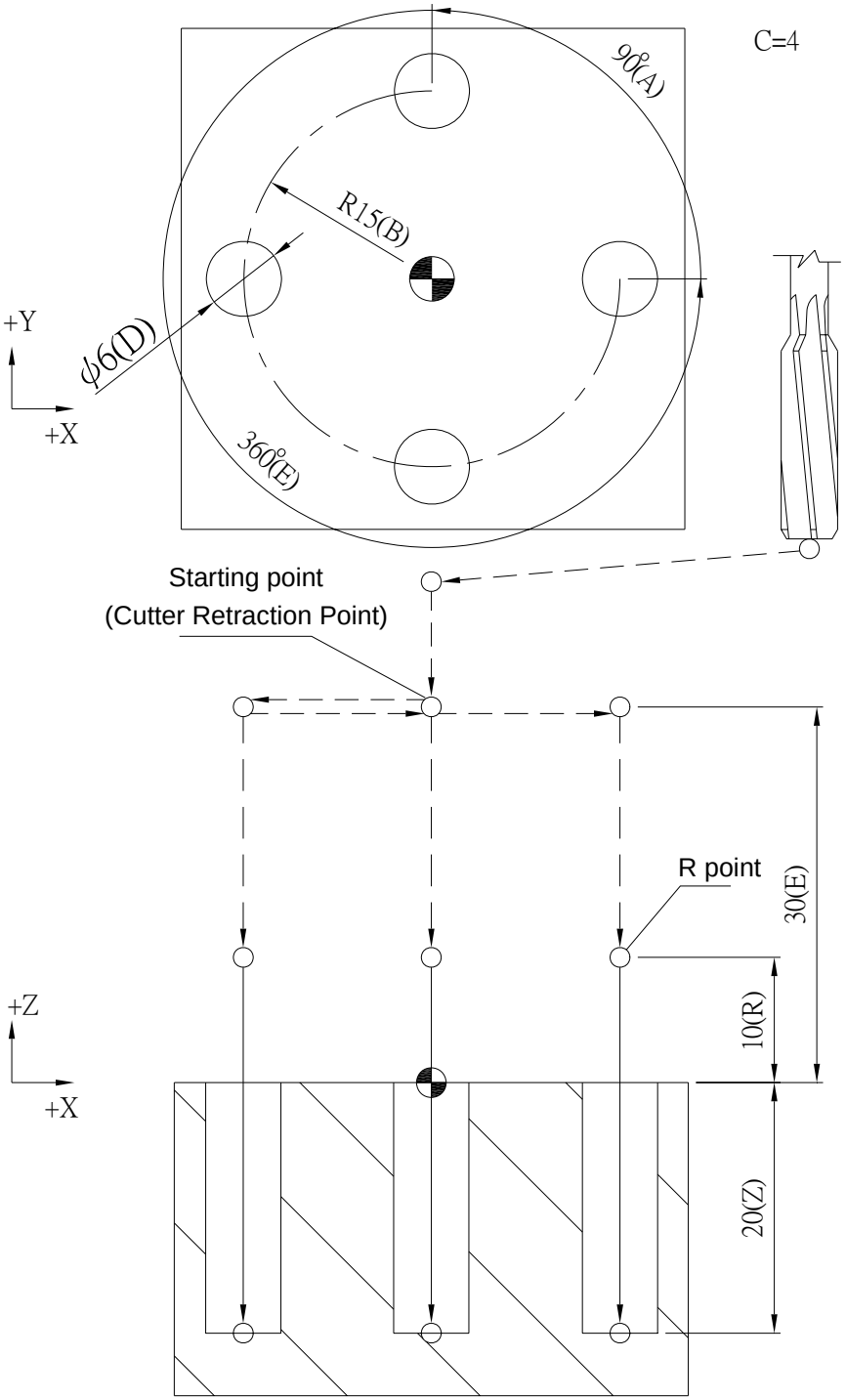

G103 Arc Mode of Multi-hole Manufacturing Cycle

G90 G00 G54 X0. Y0. Z150.;

G100 C0 D4. E30.;

G103 M4 F100. S1000 R10. Z-20. T1000 K1 X0. Y0. A30 E120 B15 C4;

G91 G00 G28 X0. Y0. Z0.;

M05;

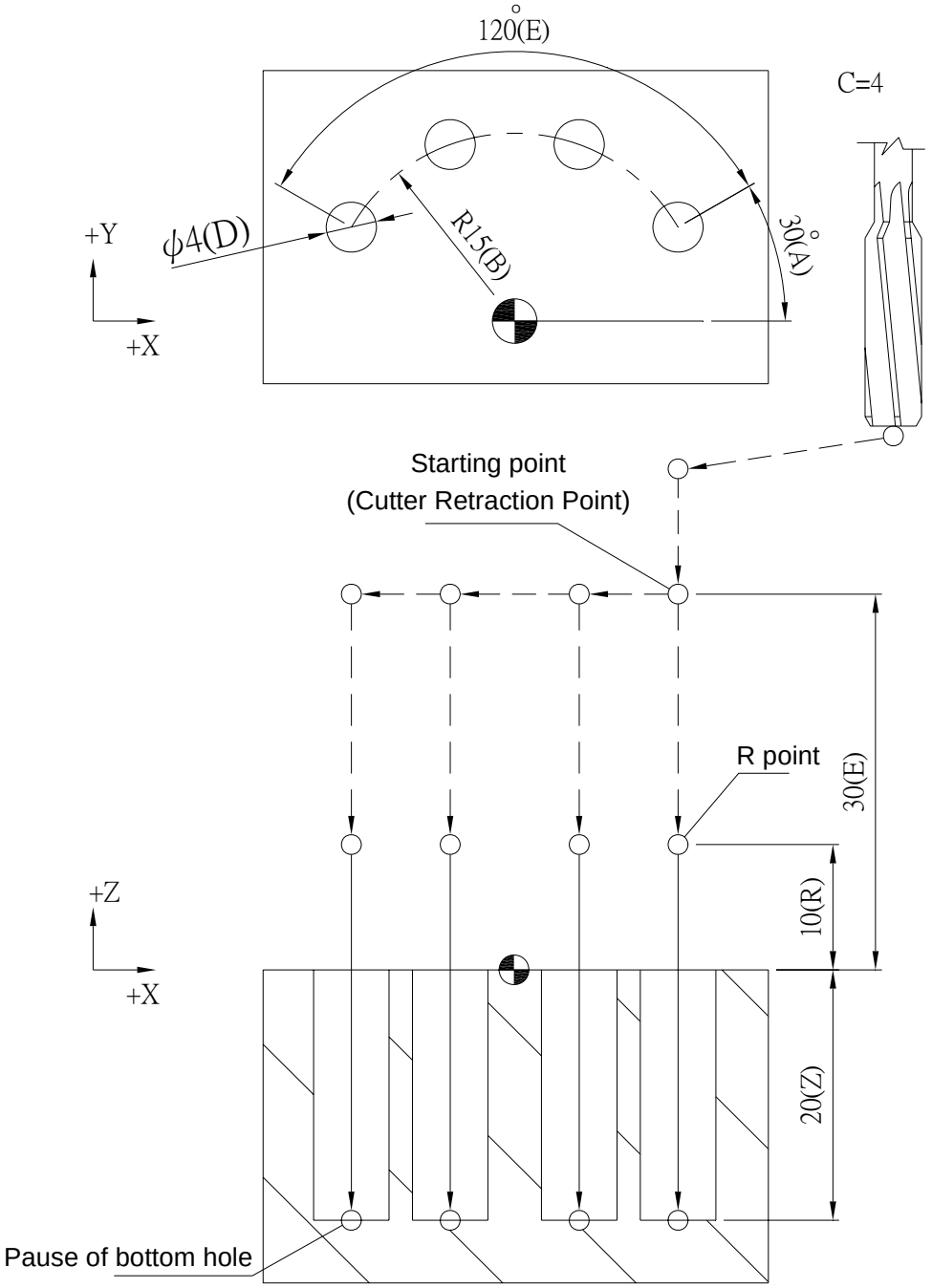

G90 G00 G54 X0. Y0. Z150.;

M29;

G100 C0 D8. E30.;

G103 M5 S1000 R20 Z-20. Q0 V1.25 T1000 K0 X0. Y0. A36 E288 B15 C5;

M28;

G91 G00 G28 X0. Y0. Z0.;

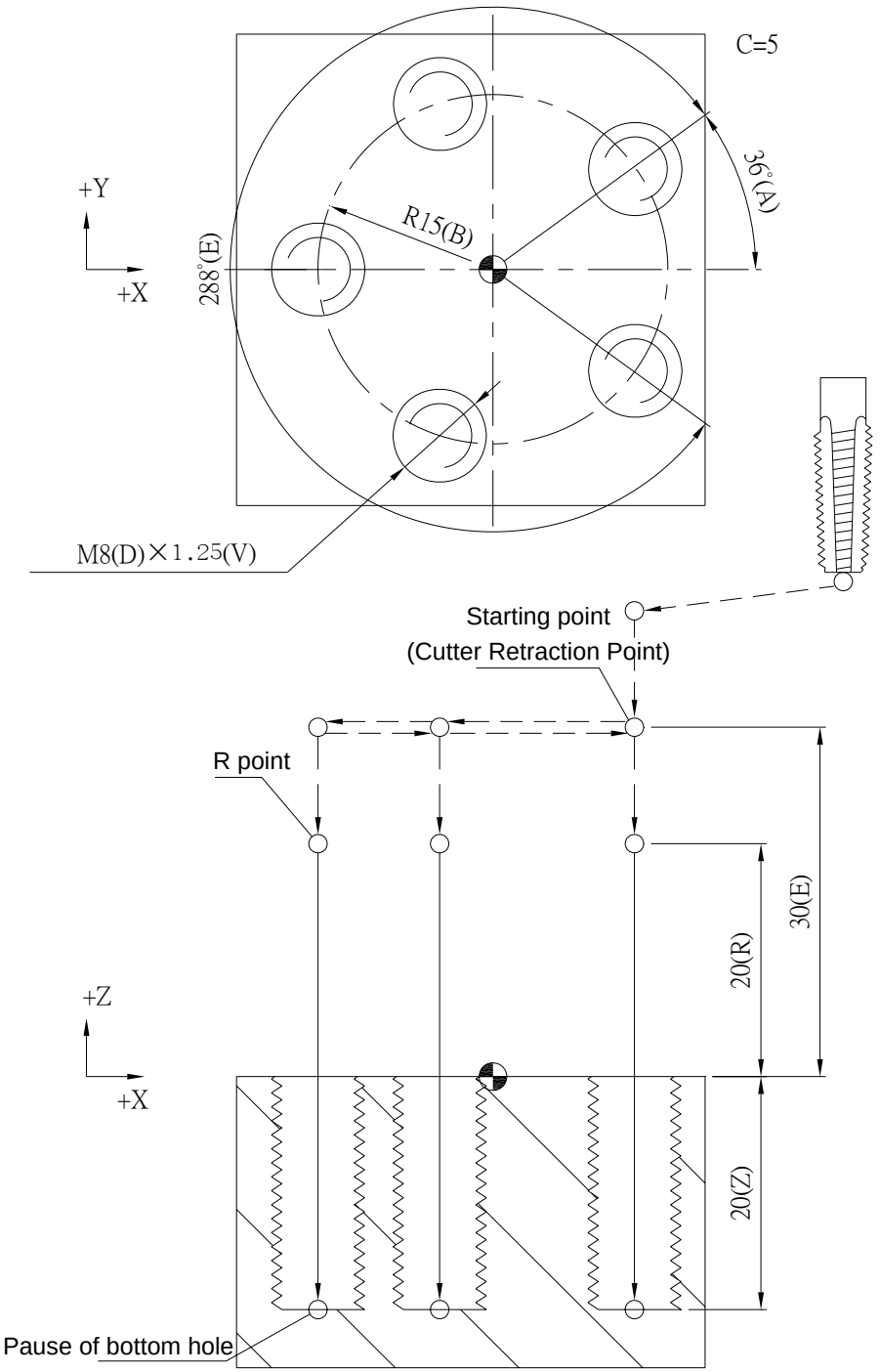

G104 Grid Mode of Multi-hole Manufacturing Cycle

Command Format

```
G104 A__ B__ C__ D__ E__ F__ K__ M__ Q__ R__
     S__ T__ U__ V__ X__ Y__ Z__;
```

Argument Instruction

- A__
  Column distance of hole alignment (mm).
- B__

  Row distance of hole alignment (mm).

- C__

  Numbers of hole being manufactured per column.

- D__

  Numbers of row being manufactured.

- E__
  Angle between manufacturing axis and ＋X-axis.
- F__

  Manufacturing feedrate (mm/min).

- K__

  Numbers of manufacturing repetition (argument M be 1~4)；

  In tapping mode (argument M be 5), it's for assigning left-handed or right-handed screw thread tapping, 0 denotes right-handed thread tapping, and 1 denotes left-handed thread tapping

- M__

  Cutting Mode

  1 : G73 high speed peck drilling cycle;

2 : G83 peck drilling cycle;

3 : G85 reaming cycle;

4 : G89 reaming cycle;

5 : tapping cycle (G74/G84, specified by argument K); if parameter #0810 be 1, it's rigid tapping; if parameter #0810 be 0, it's normal tapping.

- Q__

  Depth of feed per time (mm) (argument M be 1~4);

  In tapping mode (argument M be 5), it's for assigning Metric thread (M, MF) or British thread (BSW, BSF), 0 denotes Metric, and 1 denotes British.

- R__

  Manufacturing cycle return R point (mm).

- S__

  Spindle speed (RPM).

- T__

  Dwell time at hole bottom (1/1000 sec), minimum unit, decimal numbers are not allowed.

- U__

  Alignment types of manufactured holes. (0: rectangle; 1: grid).

- V__

  Retrace amount per manufacturing (mm)(argument M be 1~4);

  In tapping mode (argument M be 5), it's for assigning the pitch.

- X__

  Coordinate of first hole of X-axis (mm).

- Y__

  Coordinate of first hole of Y-axis (mm).

- Z__

  Coordinate of hole bottom (mm).

Program Sample

```
G90 G00 G54 X0. Y0. Z150.;
G100 C0 D6. E30.;
G104 M1 F100. S1000 R10. Z-10. Q4. V1. T1000 K1 X0. Y0. U0 A10 B10 C3 D3.E0;
G91 G00 G28 X0. Y0. Z0.;
M05;
```

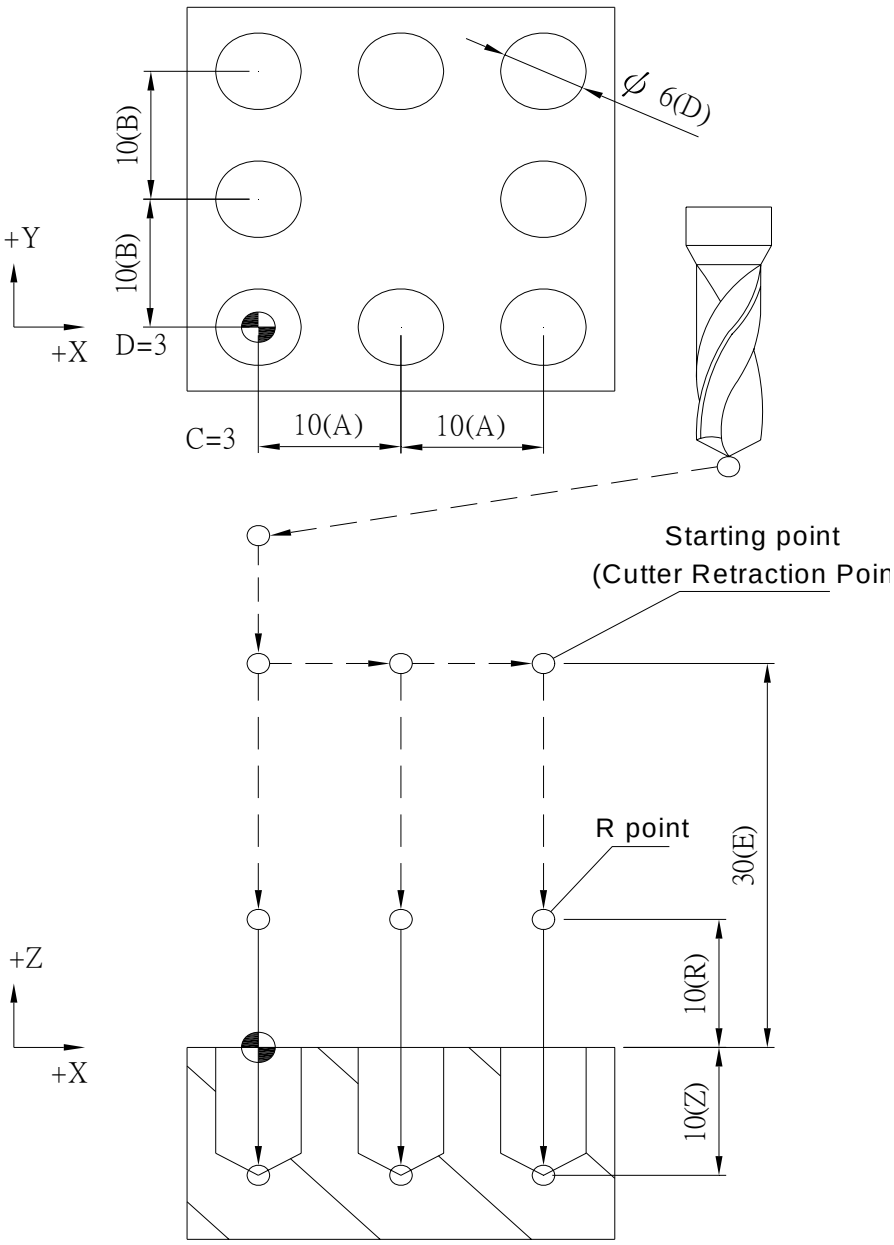

G90 G00 G54 X0. Y0. Z150.;

G100 C0 D6. E30.;

G104 M2 F100. S1000 R10. Z-20. Q5. V2. T1000 K1 X0. Y0. U0 A10 B10 C3 D3 E30;

G91 G00 G28 X0. Y0. Z0.;

M05;

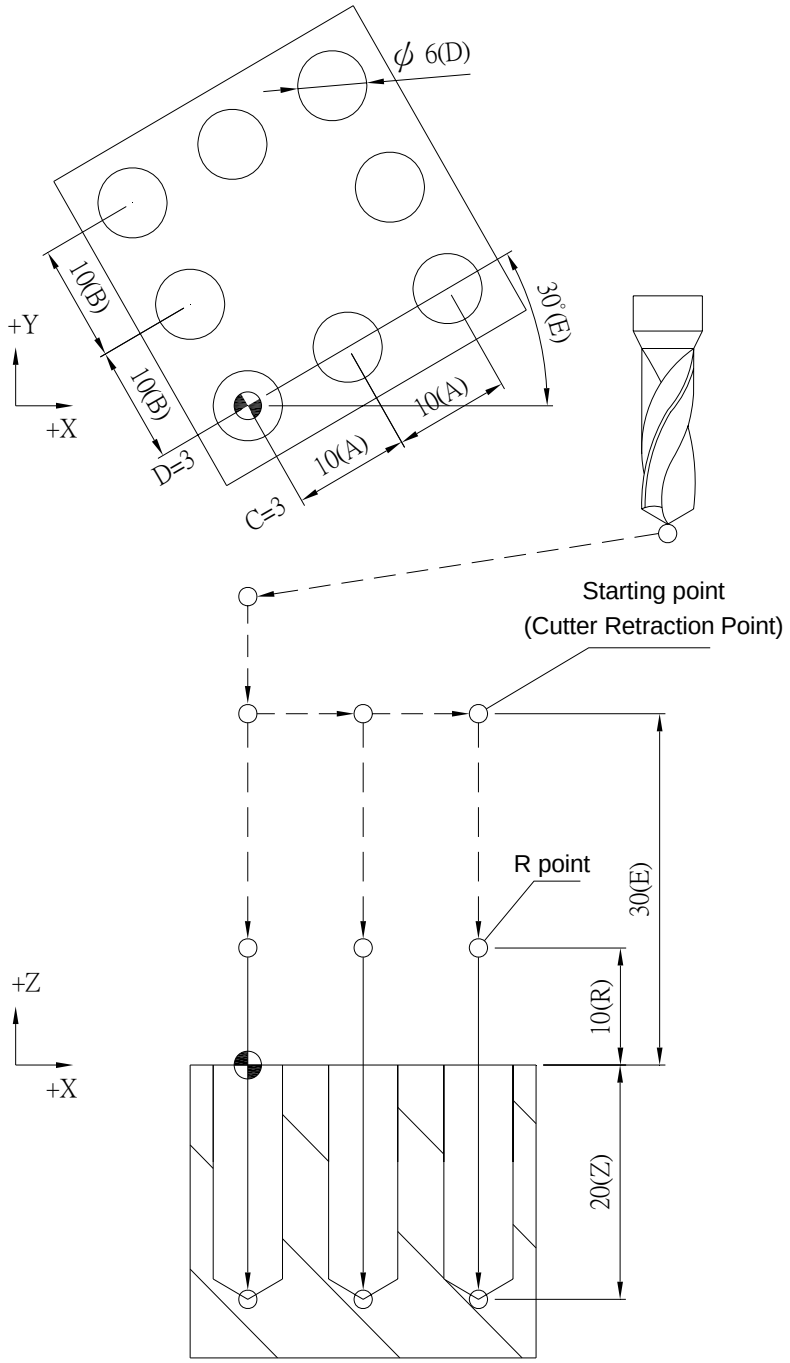

G90 G00 G54 X0. Y0. Z150.;

G100 C0 D6. E30.;

G104 M3 F100. S1000 R10. Z-20. T1000 K1 X0. Y0. U1 A10 B10 C3 D3 E30;

G91 G00 G28 X0. Y0. Z0.;

M05;

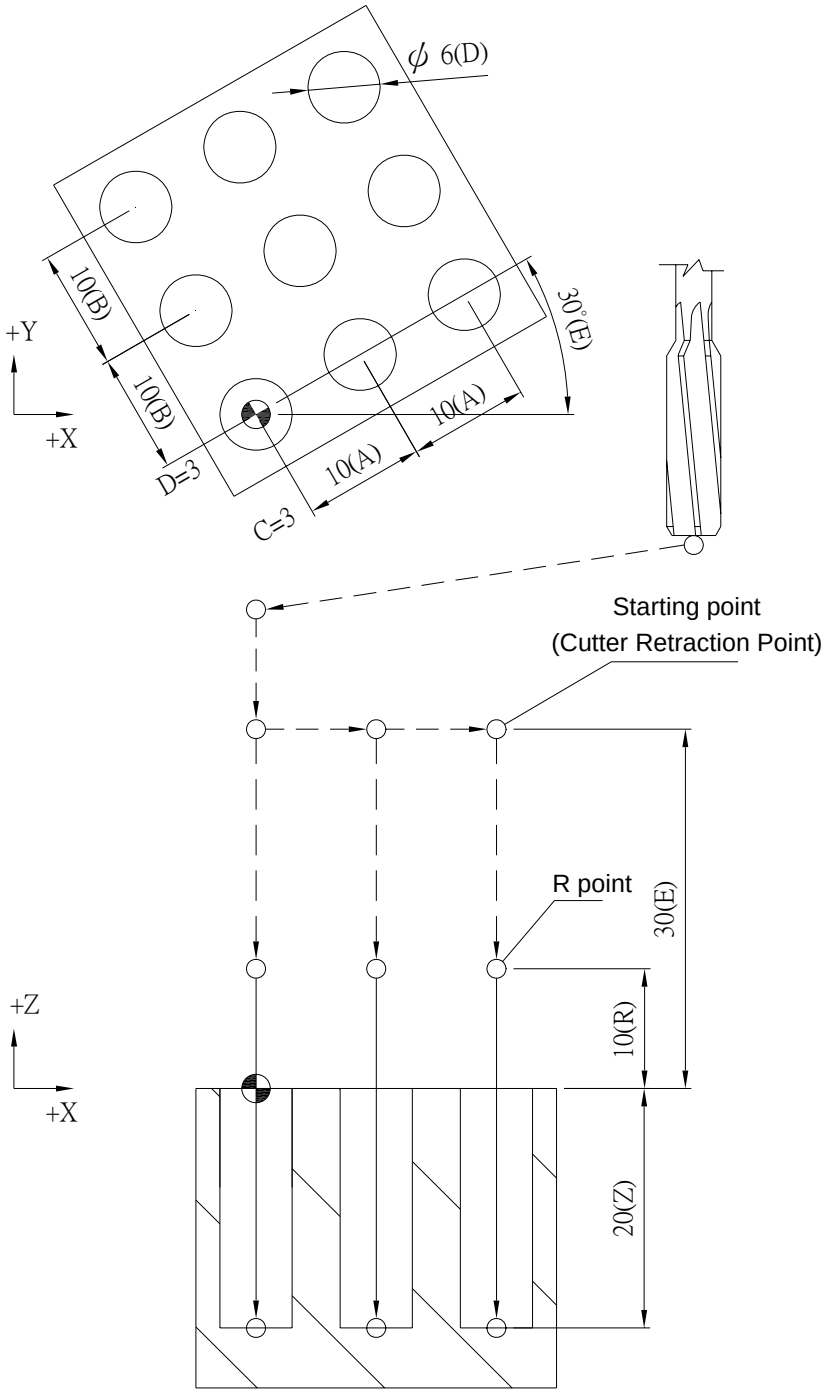

G90 G00 G54 X0. Y0. Z150.;

G100 C0 D6. E30.;

G104 M4 F100. S1000 R1.0 Z-20. T1000 K1 X0. Y0. U0 A15 B10 C2 D4 E15;

G91 G00 G28 X0. Y0. Z0.;

M05;

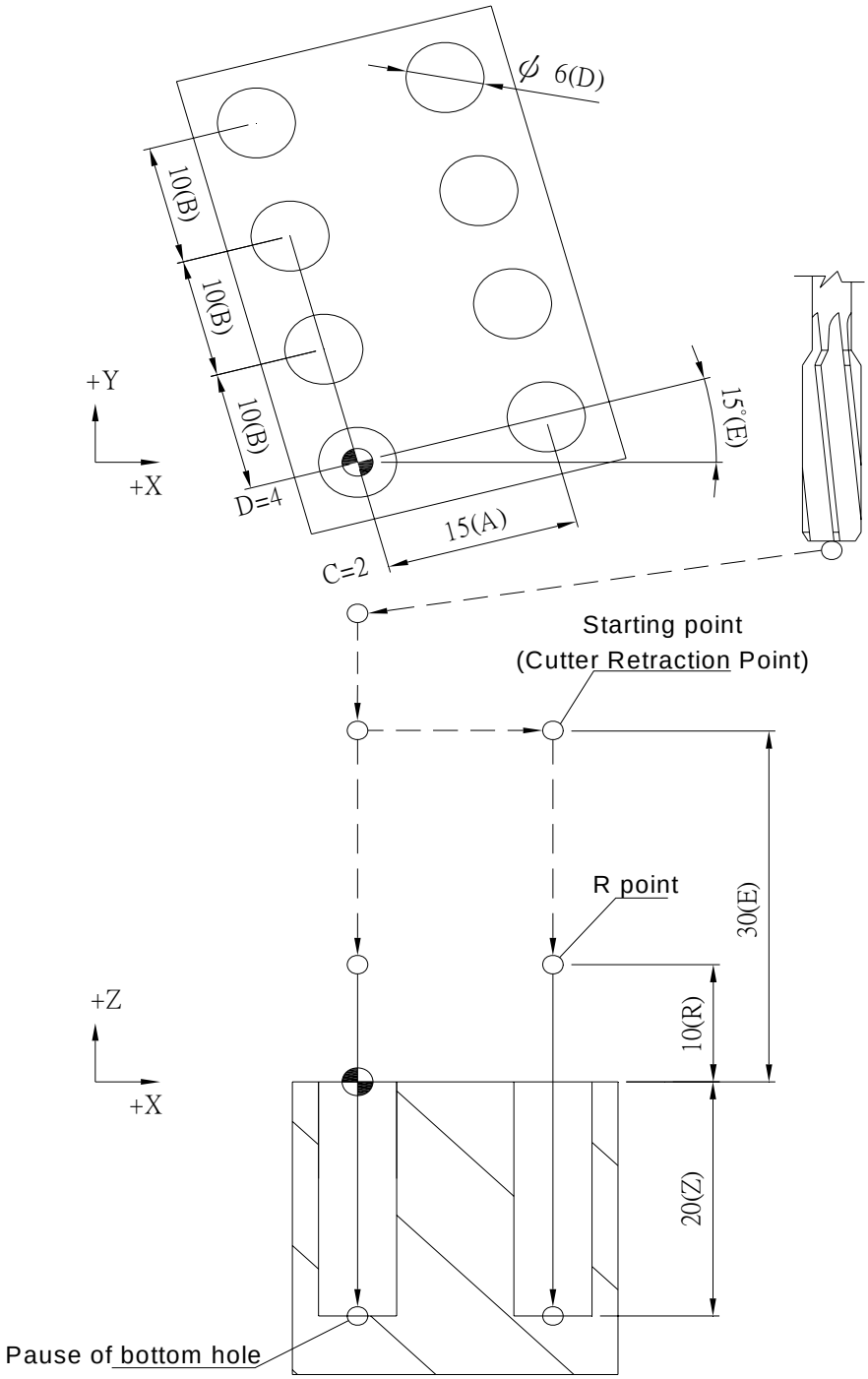

G90 G00 G54 X0. Y0. Z150.;

G100 C0 D5. E30.;

G104 M5 S1000 R20. Z-15. Q0 V0.8 T1000 K0 X0. Y0. U0 A8 B8 C4 D5 E0;

G91 G00 G28 X0. Y0. Z0.;

M05;

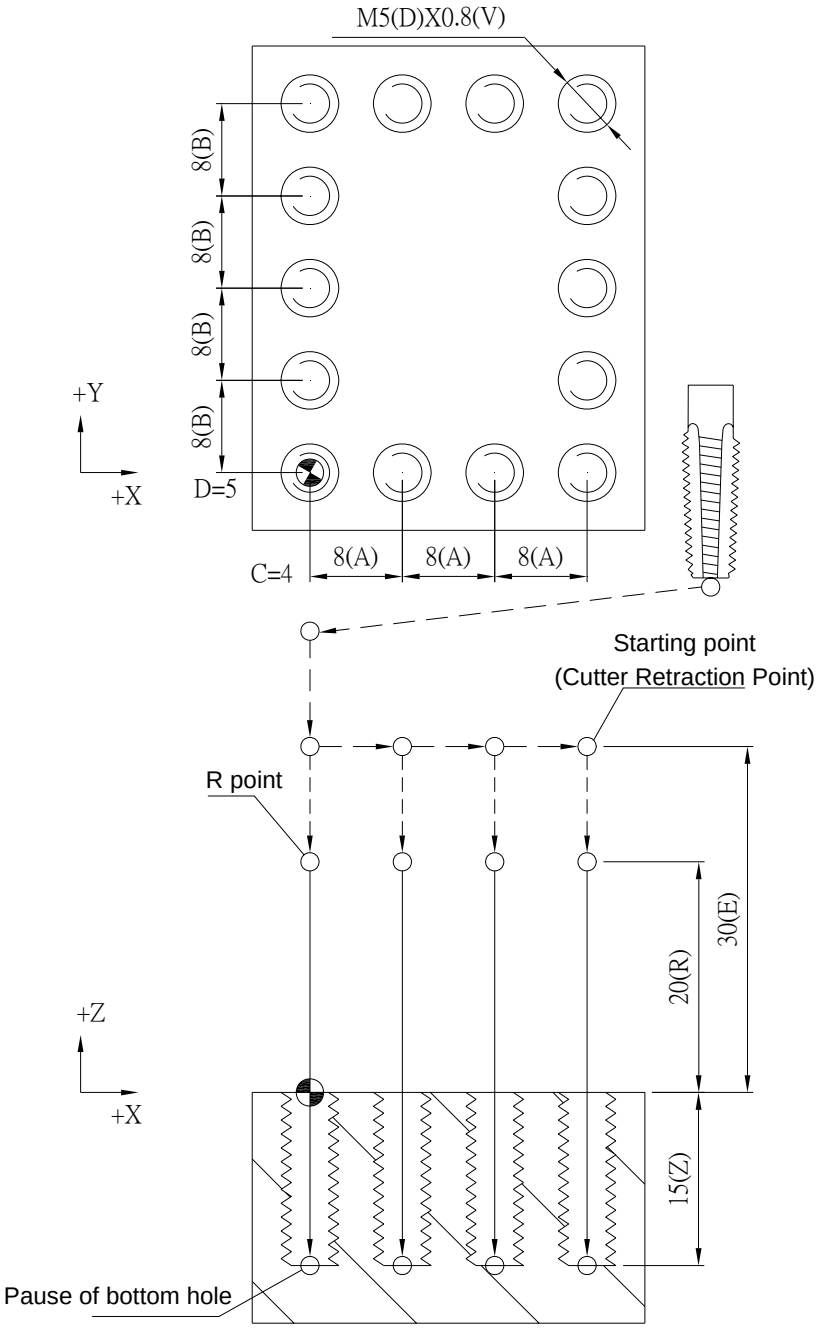

G105 Promiscuous Mode of Multi-hole Manufacturing Cycle

Command Format

```
G105 A__ B__ C__ D__ E__ H__ I__ J__ K__
M__ Q__ R__ S__ T__ V__ X__ Y__ Z__;
```

Argument Instruction

- A__
  Coordinate of 2nd hole of X-axis (mm)
- B__
  Coordinate of 2nd hole of Y-axis (mm)
- C__
  Coordinate of 3rd hole of X-axis (mm)
- D__
  Coordinate of 3rd hole of Y-axis (mm)
- E__
  Coordinate of 4th hole of X-axis (mm)
- F__
  Manufacturing feedrate (mm/min)
- H__
  Coordinate of 4th hole of X-axis (mm)
- I__
  Coordinate of 5th hole of X-axis (mm)
- J__
  Coordinate of 5th hole of Y-axis (mm).
- K__
  Numbers of manufacturing repetition (argument M be 1~4)；
  In tapping mode (argument M be 5), it's for assigning left-handed or right-handed screw thread tapping, 0 denotes right-handed thread tapping, and 1 denotes left-handed thread tapping
- M__
  Cutting Mode
  1 : G73 high speed peck drilling cycle;
  2 : G83 peck drilling cycle;
  3 : G85 reaming cycle;
  4 : G89 reaming cycle;
  5 : tapping cycle (G74/G84, specified by argument K); if parameter #0810 be 1, it's rigid tapping; if parameter #0810 be 0, it's normal tapping.

- Q__
  Depth of feed per time (mm) (argument M be 1~4);
  In tapping mode (argument M be 5), it's for assigning Metric thread (M, MF) or British thread (BSW, BSF), 0 denotes Metric, and 1 denotes British.
- R__
  Manufacturing cycle return R point (mm).
- S__
  Spindle speed (RPM).
- T__
  Dwell time at hole bottom (1/1000 sec), minimum unit, decimal numbers are not allowed.
- U__
  Alignment types of manufactured holes. (0: rectangle; 1: grid).
- V__
  Retrace amount per manufacturing (mm)(argument M be 1~4);
  In tapping mode (argument M be 5), it's for assigning the pitch.
- X__
  Coordinate of first hole of X-axis (mm).
- Y__
  Coordinate of first hole of Y-axis (mm).
- Z__
  Coordinate of hole bottom (mm).

Program Sample

```
G90 G00 G54 X0. Y0. Z150.;
G100 C0 D6. E30.;
G105 M1 F100. S1000 R10. Z-10. Q4. V1. T1000 K1 X0. Y0. A8. B11. C16. D15.;
G91 G00 G28 X0. Y0. Z0.;
M05;
```

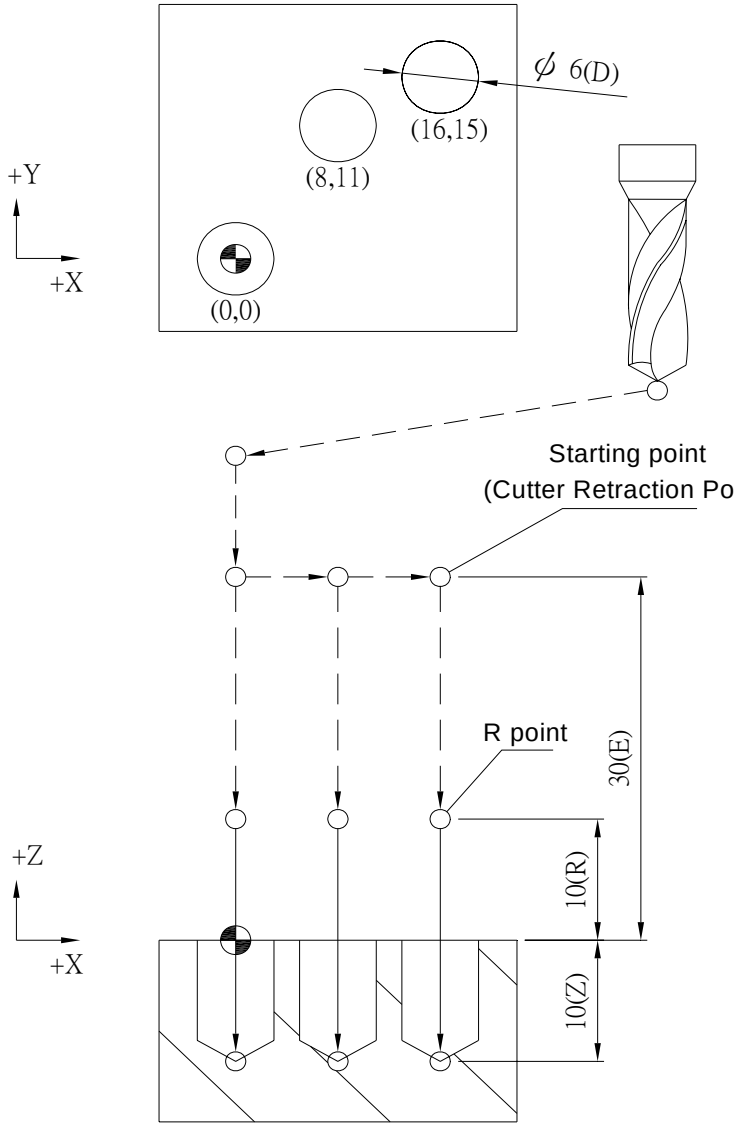

G90 G00 G54 X0. Y0. Z150.;

G100 C0 D6. E30.;

G105 M2 F100. S1000 R10. Z-20. Q5. V2. T1000 K1 X0. Y0. A8. B11. C16.D15. E25. H6. I25. J23.;

G91 G00 G28 X0. Y0. Z0.;

M05;

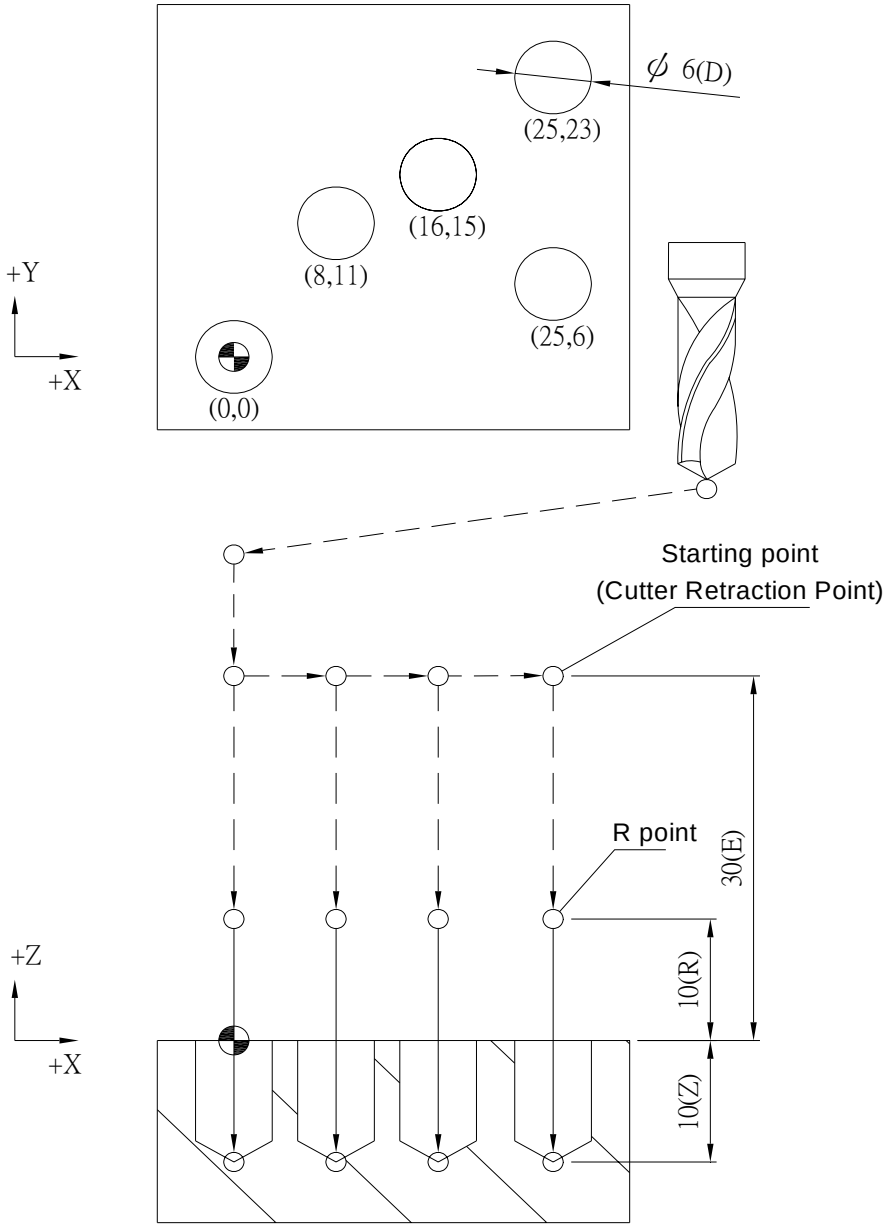

G90 G00 G54 X0. Y0. Z150.;

G100 C0 D6. E30.;

G105 M3 F100. S1000 R10. Z-20. T1000 K1 X-13. Y-10. A-5. B10. C5. D-10. E13. H10.;

G91 G00 G28 X0. Y0. Z0.;

M05;

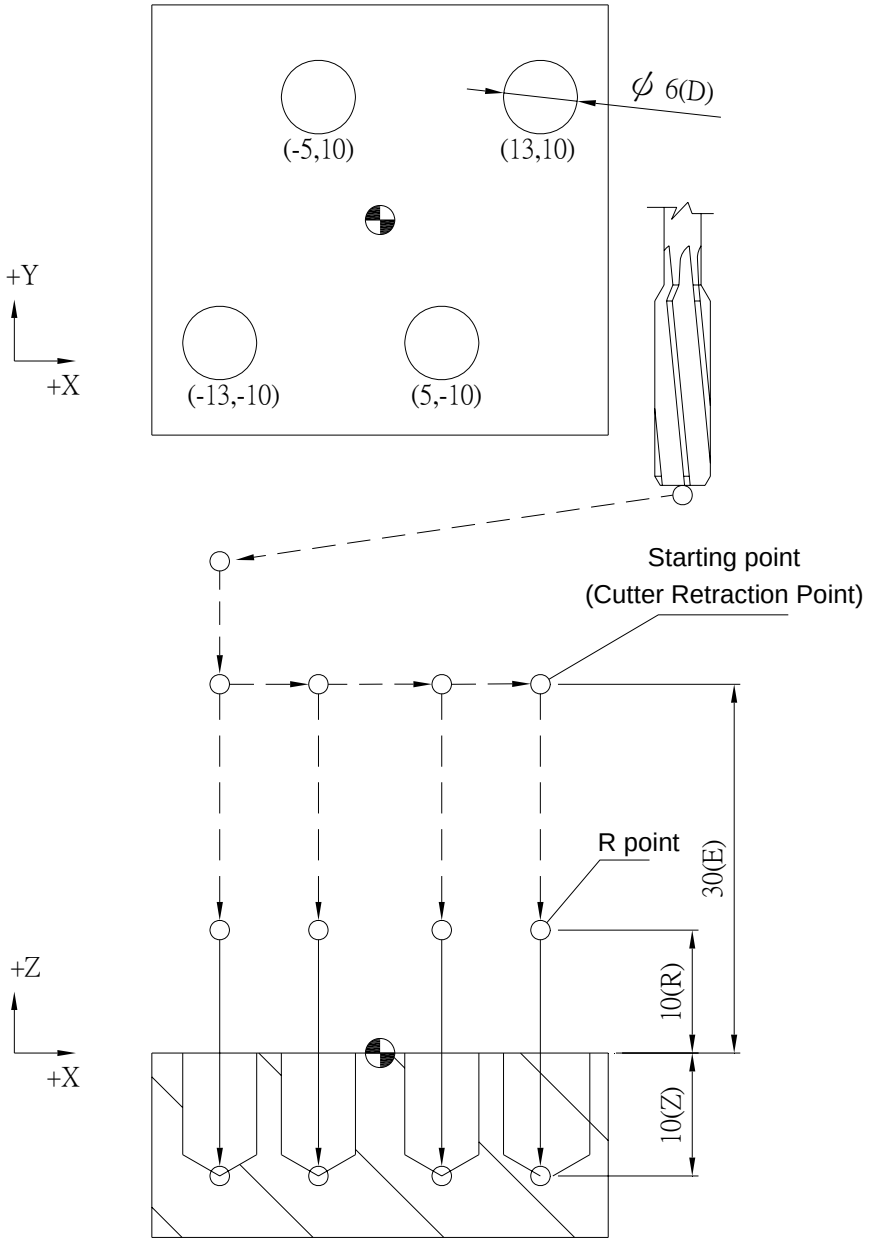

G90 G00 G54 X0. Y0. Z150.;

G100 C0 D6. E30.;

G105 M4 F100. S1000 R10. Z-20. T1000 K1 X0. Y0. A-10. B-10. C-10. D10. E10. H-10. I10. J10.;

G91 G00 G28 X0. Y0. Z0.;

M05;

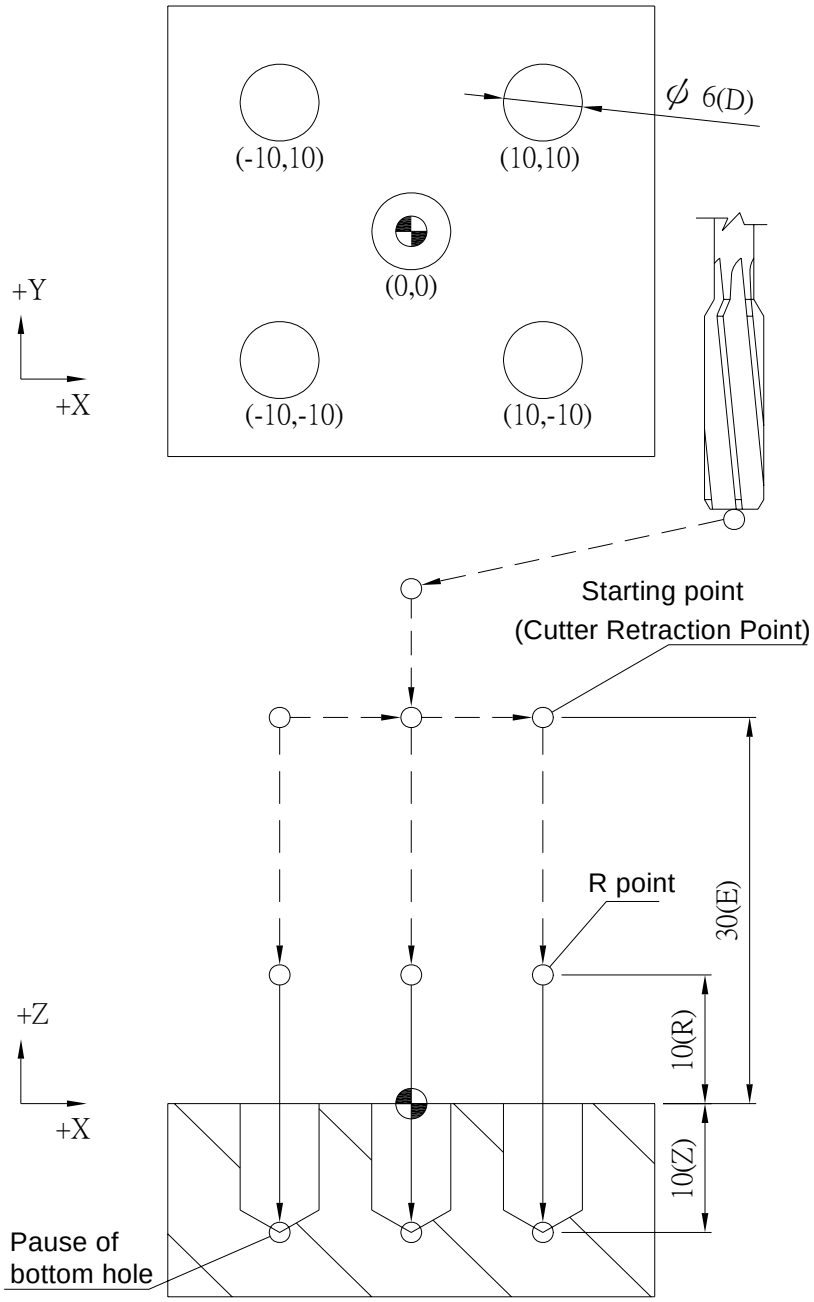

G90 G00 G54 X0. Y0. Z150.;

M29;

G100 C0 D5. E30.;

G105 M5 S1000 R20. Z-30. Q0. V0.8 T1000 K0 X-12. Y0. A-4. B12. C-4. D-12. E10.H8. I10. J-8.;

M28;

G91 G00 G28 X0. Y0. Z0.;

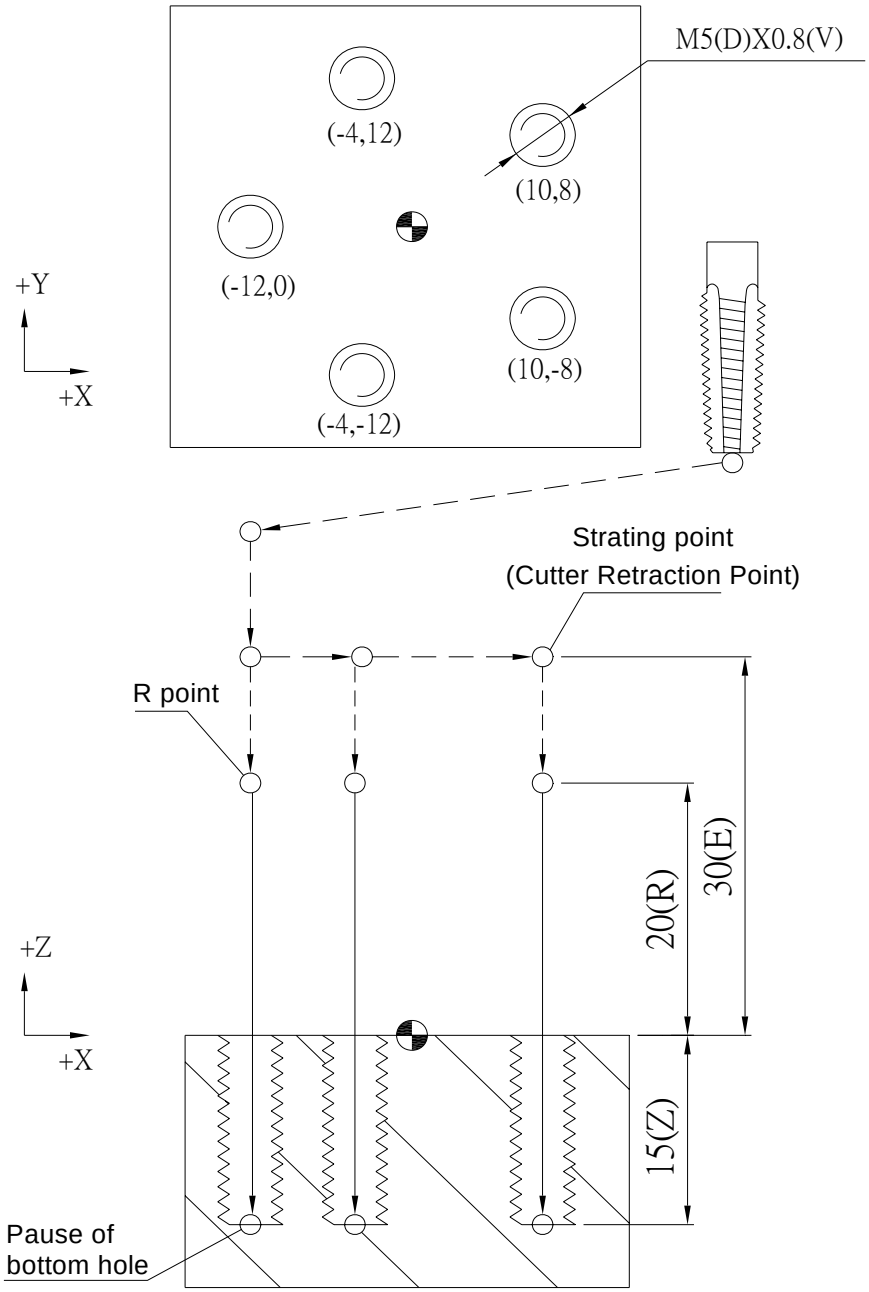

G111~G114 Compound G-Code for Plane Manufacturing

Command	Instruction	Illustration
G111	X-axis Two-Way Plane Manufacturing	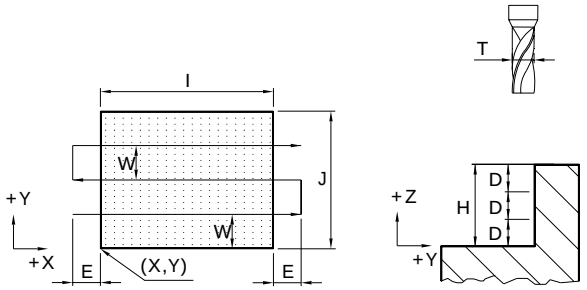
G112	Y-axis Two-Way Plane Manufacturing	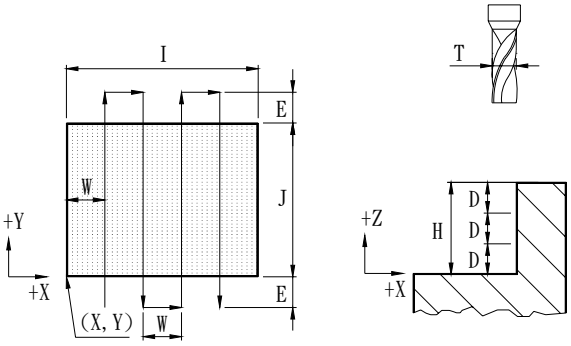
G113	X-axis One-Way Plane Manufacturing	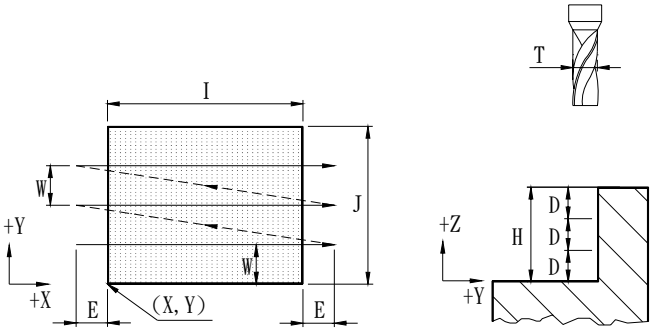
G114	Y-axis One-Way Plane Manufacturing	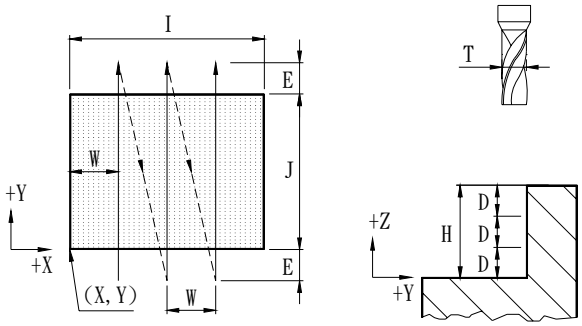

(Note) For more information, refer to the latter portion of this section.

G111 X-axis Two-Way Plane Manufacturing

Command Format

```
G111 E__H__ I__ J__ S__ T__ W__
X__ Y__ Z__;
```

Argument Instruction

- D__
  Depth of cutting per manufacturing (mm).
- E__
  Safe margin in X-axis (mm).
- F__
  Manufacturing Feedrate (mm/min).
- H__
  Total cutting depth (mm).
- I__
  Workpiece Length in X-axis (mm).
- J__
  Workpiece Length in Y-axis (mm).
- S__
  Spindle speed (RPM).
- T__
  Tool diameter (mm).
- W__
  Width of per cutting (mm).
- X__
  Starting point coordinate for program manufacturing in X-axis (mm).
- Y__
  Starting point coordinate for program manufacturing in Y-axis (mm).
- Z__
  Starting point position on manufactured plane in Z-axis (mm).

Program Sample

```
G90 G00 G54 X0. Y0. Z150.;
G100 C0 E50.;
G111 F1000. S1200 T25. Z0. H10. D3. W10. X-115. Y-57.5 I230. J115. E5.;
G91 G00 G28 X0. Y0. Z0.;
M05;
```

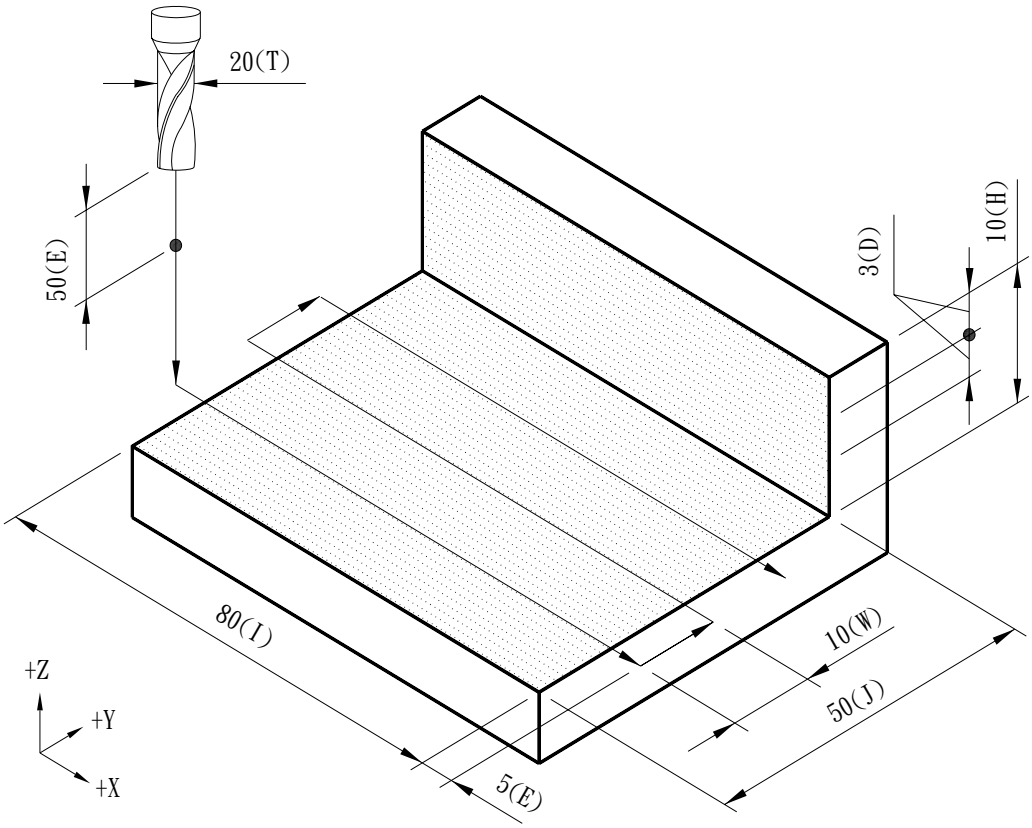

G112 Two-way Plane Processing in Y-axis

Command Format

```
G112 D__ E__ F__ H__ I__ J__ S__ T__ W__
     X__ Y__ Z__;
```

Argument Instruction

- D__
  Depth of cutting per manufacturing (mm).
- E__
  Safe margin in Y-axis (mm).
- F__
  Manufacturing Feedrate (mm/min).
- H__
  Total cutting depth (mm).
- I__
  Workpiece Length in X-axis (mm).
- J__
  Workpiece Length in Y-axis (mm).
- S__
  Spindle speed (RPM).
- T__
  Tool diameter (mm).
- W__
  Width of per cutting (mm).
- X__
  Starting point coordinate for program manufacturing in X-axis (mm).
- Y__
  Starting point coordinate for program manufacturing in Y-axis (mm).
- Z__
  Starting point position on manufactured plane in Z-axis (mm).

Program Sample

```
G90 G00 G54 X0. Y0. Z150.;
G100 C0 E20;
G112 F1000. S1200 T25. Z-60. H10. D5. W12.5 X-115. Y-57.5 I230. J115. E5.;
G91 G00 G28 X0. Y0. Z0.;
M05;
```

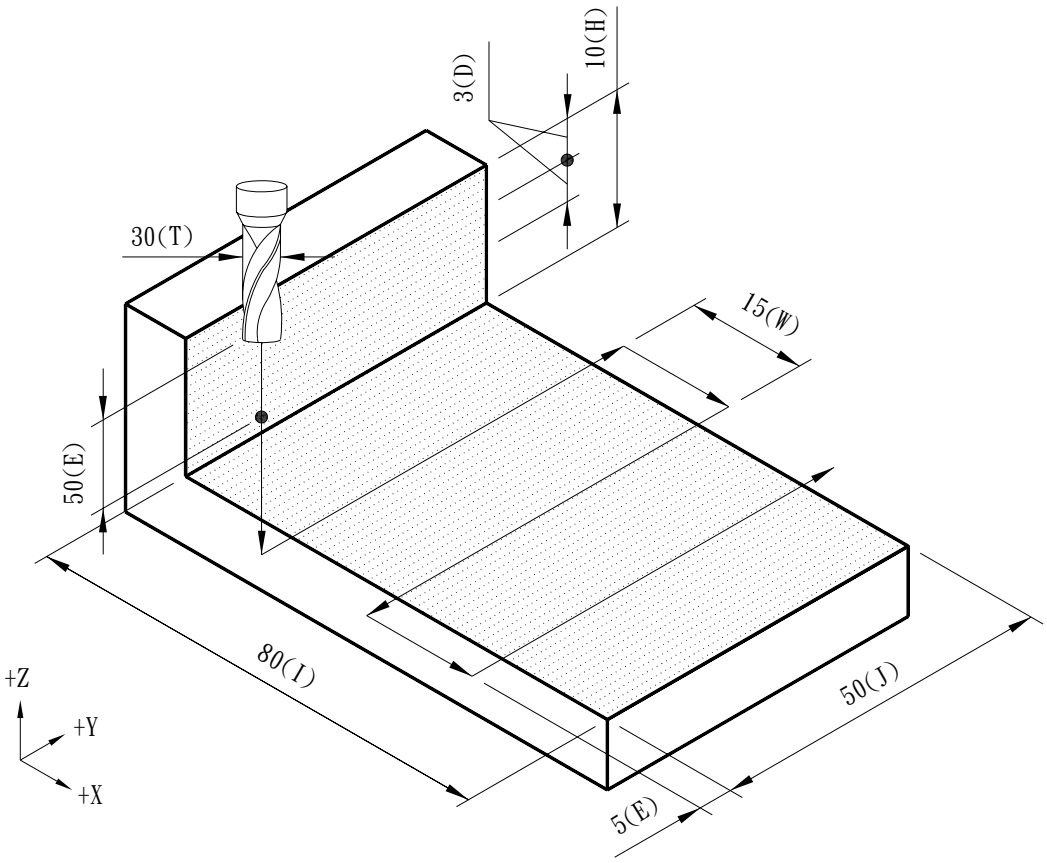

G113 One-way Plane Manufacturing in X-axis

Command Format

```
G113 D__ E__ F__ H__ I__ J__ S__ T__ W__
X__ Y__ Z__;
```

Argument Instruction

- D__
  Depth of cutting per manufacturing (mm).
- E__
  Safe margin in X-axis (mm).
- F__
  Manufacturing Feedrate (mm/min).
- H__
  Total cutting depth (mm).
- I__
  Workpiece Length in X-axis (mm).
- J__
  Workpiece Length in Y-axis (mm).
- S__
  Spindle speed (RPM).
- T__
  Tool diameter (mm).
- W__
  Width of per cutting (mm).
- X__
  Starting point coordinate for program manufacturing in X-axis (mm).
- Y__
  Starting point coordinate for program manufacturing in Y-axis (mm).
- Z__
  Starting point position on manufactured plane in Z-axis (mm).

Program Sample

```
G90 G00 G54 X0. Y0. Z150.;
G100 C0 E50;
G113 F1000.0 S1200 T25. Z0. H10. D3. W10. X-115. Y-57.5 I230. J115. E5.;
G91 G00 G28 X0. Y0. Z0.;
M05;
```

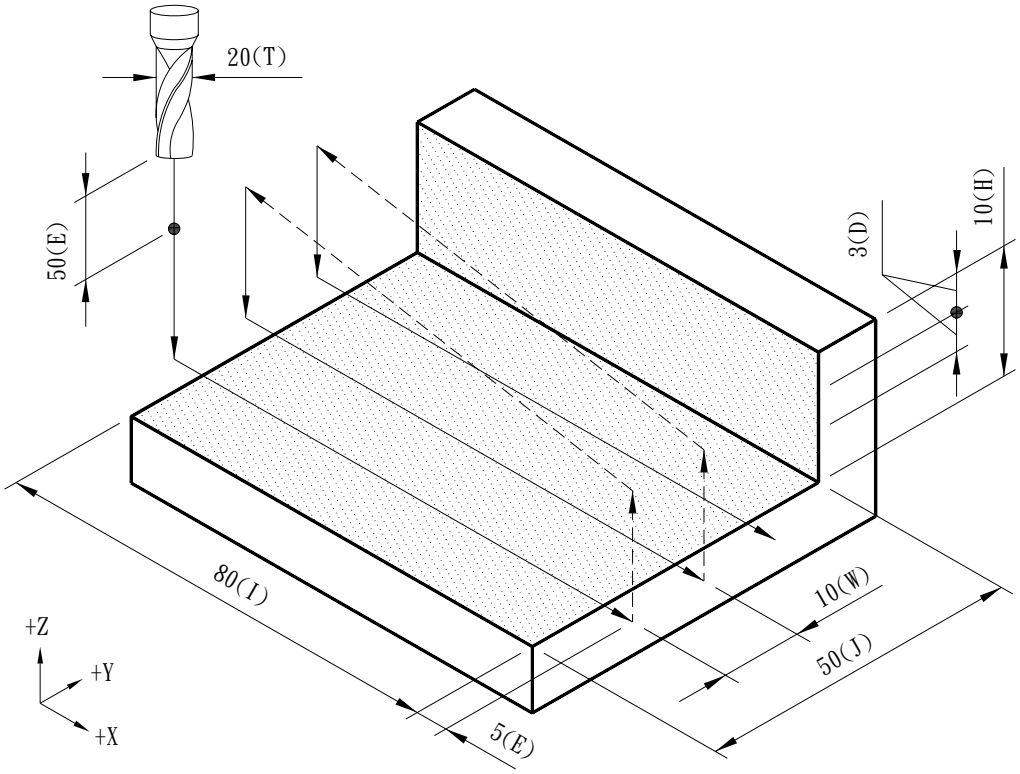

G114 Y One-way Plane Manufacturing in Y-axis

Command Format

```
G114 D__ E__ F__ H__ I__ J__ S__ T__ W__
X__ Y__ Z__;
```

Argument Instruction

- D__
  Depth of cutting per manufacturing (mm).
- E__
  Safe margin in Y-axis (mm).
- F__
  Manufacturing Feedrate (mm/min).
- H__
  Total cutting depth (mm).
- I__
  Workpiece Length in X-axis (mm).
- J__
  Workpiece Length in Y-axis (mm).
- S__
  Spindle speed (RPM).
- T__
  Tool diameter (mm).
- W__
  Width per cutting (mm).
- X__
  Starting point coordinate for program manufacturing in X-axis (mm).
- Y__
  Starting point coordinate for program manufacturing in Y-axis (mm).
- Z__
  Starting point position on manufactured plane in Z-axis (mm).

Program Sample

G90 G00 G54 X0. Y0. Z150.;

G100 C0 E50.;

G114 F1000. S1200 T25. Z0. H10. D3. W10. X-115. Y-57.5 I230. J115. E5.;

G91 G00 G28 X0. Y0. Z0.;

M05;

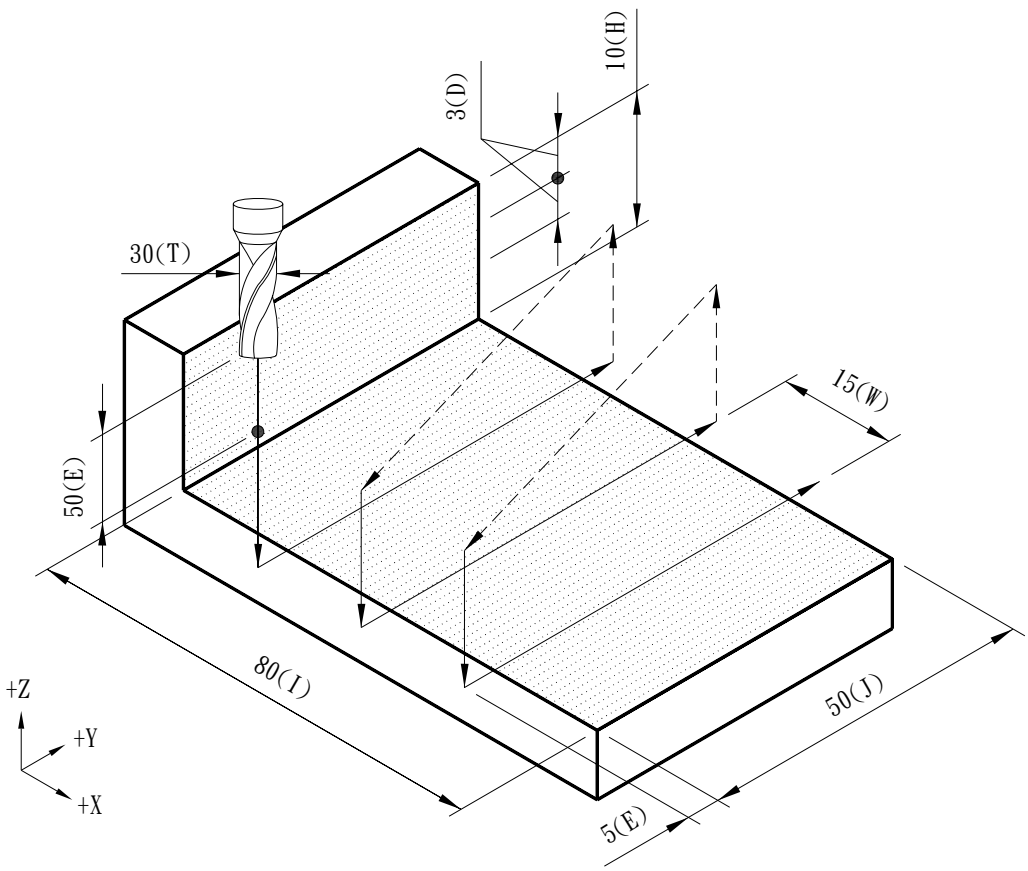

G121~G123 Compound G-Code for Side Manufacturing

Command	Instruction	Illustration
G121	Circular Shape Side Manufacturing	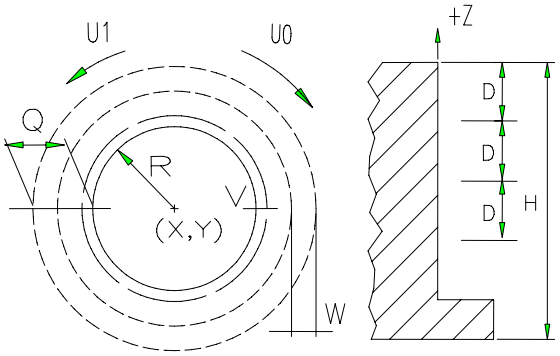
G122	Rectangle Shape Side Manufacturing	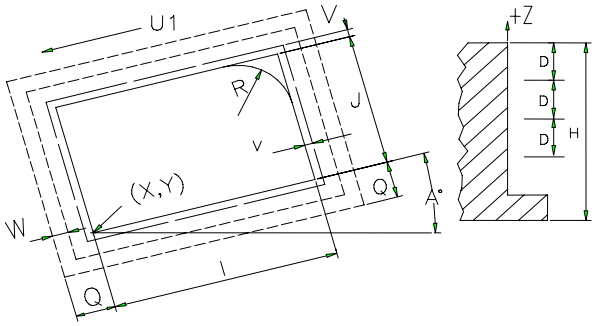
G123	Track Shape Side Manufacturing	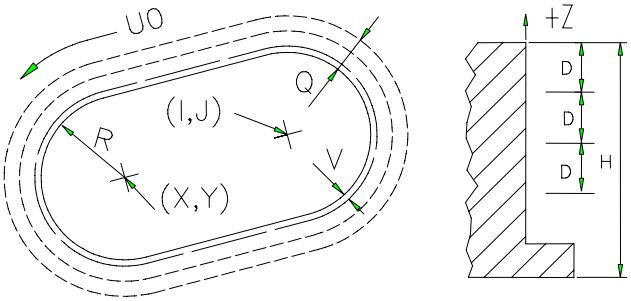

(Note) For more information, refer to the latter portion of this section.

G121 Circular Shape Side Manufacturing

Command Format

```
G121 D__ F__ H__ M__ Q__ R__ S__ T__ U__
V__ W__ X__ Y__ Z__;
```

Argument Instruction

Program Code	Content				
G121	Circular Shape Side Manufacturing				
Variable	**Descerption**	**Remark**	**Variable**	**Descerption**	**Remark**
A			O		
B			P		
C			Q	Total amount of removal	mm
D	Depth per cutting	mm	R	Radius of island for precision cutting	mm
E			S	Spindle speed	RPM
F	Feedrate	mm/min	T	Tool diameter	mm
G			U	Cutting direction	0 : cw 1 : ccw
H	Total cutting depth	mm	V	Stock to leave for precision cutting	mm
I			W	Width per cutting	mm
J			X	Reference point in X-axis	mm
K			Y	Reference point in Y-axis	mm
L			Z	Height of workpiece surface	mm
M	Cutting format (Note)				
N					

Note : Cutting Format: 1/Outer rough cutting; 2/Outer precision cutting; 3/Internal rough cutting; 4/Internal precision cutting
(setting value/specified cutting format)

G122 Rectangle Shape Side Manufacturing

Command Format

```
G122 A__ D__ F__ H__ I__ J__ M__ Q__ R__
S__ T__ U__ V__ W__ X__ Y__ Z__;
```

Argument Instruction

Program Code	Content				
G122	Rectangle Shape Side Manufacturing				
Variable	**Descerption**	**Remark**	**Variable**	**Descerption**	**Remark**
A	Angle	deg	O		
B			P		
C			Q	Total amount of removal	mm
D	Depth per cutting	mm	R	Fillet radius	mm
E			S	Spindle speed	RPM
F	Feedrate	mm/min	T	Tool diameter	mm
G			U	Cutting direction	0: cw, 1: ccw
H	Total cutting depth	mm	V	Stock to leave for precision cutting	mm
I	Length of finished workpiece	mm	W	Width per cutting	mm
J	Width of finished workpiece	mm	X	Reference point in X-axis	mm
K			Y	Reference point in Y-axis	mm
L			Z	Height of workpiece surface	mm
M	Cutting format (Note)				
N					

Note : Cutting Format: 1/Outer rough cutting; 2/Outer precision cutting; 3/Internal rough cutting; 4/Internal precision cutting
(setting value/specified cutting format)

G123 Track Shape Side Manufacturing

Command Format

G123 D__ F__ H__ I__ J__ M__ Q__ R__ S__
T__ U__ V__ W__ X__ Y__ Z__;

Argument Instruction

Program Code	Content				
G123	Track Shape Side Manufacturing				
Variable	**Descerption**	**Remark**	**Variable**	**Descerption**	**Remark**
A			O		
B			P		
C			Q	Total amount of removal	
D	Depth per cutting	mm	R	Radium of track arc	mm
E			S	Spindle speed	RPM
F	Feedrate	mm/min	T	Tool diameter	mm
G			U	Cutting direction	0：cw，1:ccw
H	Total cutting depth	mm	V	Stock to leave for precision cutting	mm
I	Second center point X coordinate	mm	W	Width per cutting	mm
J	Second center point Y coordinate	mm	X	First center point X coordinate	mm
K			Y	First center point Y coordinate	mm
L			Z	Height of workpiece surface	mm
M	Cutting format (Note)				
N					

Note：Cutting Format: 1/Outer rough cutting; 2/Outer precision cutting; 3/Internal rough cutting; 4/Internal precision cutting

(setting value/specified cutting format)

G131~G133 Compound G-Code for Pocket Manufacturing

Command	Instruction	Illustration
G131	Circular Shape Pocket Manufacturing	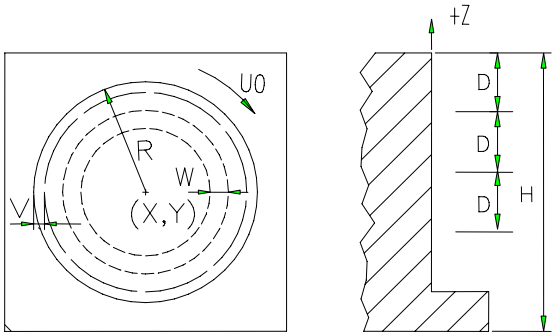
G132	Rectangle Shape Pocket Manufacturing	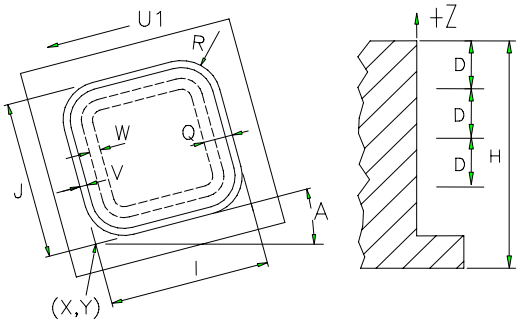
G133	Track Shape Pocket Manufacturing	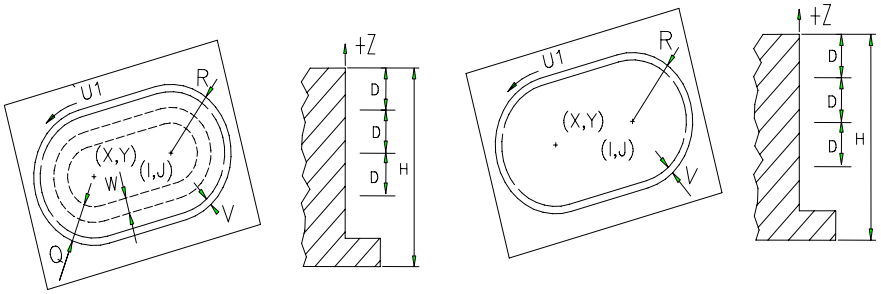

(Note) For more information, refer to the latter portion of this section.

G131 Circular Shape Pocket Manufacturing

Command Format

```
G131 D__ E__ F__ H__ M__ R__ S__ T__ U__ V__
W__ X__ Y__ Z__;
```

Argument Instruction

Program Code	Content				
G131	Circular Shape Pocket Manufacturing				
Variable	**Descerption**	**Remark**	**Variable**	**Descerption**	**Remark**
A			O		
B			P		
C			Q		
D	Depth per cutting	mm	R	Radium of circle	mm
E			S	Spindle speed	RPM
F	Feedrate	mm/min	T	Tool diameter	mm
G			U	Cutting direction	0:cw，1:ccw
H	Total cutting depth	mm	V	Stock to leave for precision cutting	mm
I			W	Width per cutting	mm
J			X	Center point X coordinate	mm
K			Y	Center point Y coordinate	mm
L			Z	Height of workpiece surface	mm
M	Cutting Format (Note)				
N					

Note : Cutting Format: 1/Rough cutting; 2/Precision cutting

(setting value/specified cutting format)

G132 Rectangle Shape Fillet and Pocket Manufacturing

Command Format

```
G132 A__ D__ E__ F__ H__ I__ J__ M__ R__ S__
T__ U__ V__ W__ X__ Y__ Z__;
```

Argument Instruction

Program Code	Content				
G132	Rectangle Shape Pocket Manufacturing				
Variable	**Description**	**Remark**	**Variable**	**Description**	**Remark**
A	Angle	deg	O		
B			P		
C			Q		
D	Depth per cutting	mm	R	Fillet Radius	mm
E			S	Spindle speed	RPM
F	Feedrate	mm/min	T	Tool diameter	mm
G			U	Cutting direction	0 : cw 1 : ccw
H	Total cutting depth	mm	V	Stock to leave for precision cutting	mm
I	Length of finished workpiece	mm	W	Width per cutting	mm
J	Width of finished workpiece	mm	X	Center point X coordinate	mm
K			Y	Center point Y coordinate	mm
L			Z	Height of workpiece surface	mm
M	Cutting format (Note)				
N					

Note : Cutting Format: 1/Rough cutting; 2/Precision cutting

(setting value/specified cutting format)

G133 Track Shape Pocket Manufacturing

Command Format

G133 D__ F__ H__ I__ J__ M__ R__ S__ T__

U__ V__ W__ X__ Y__ Z__;

Argument Instruction

Program Code	Manufacturing				
G134	Track Shape Pocket Cutting				
Variable	**Descerption**	**Remark**	**Variable**	**Descerption**	**Remark**
A			O		
B			P		
C			Q		
D	Depth per cutting	mm	R	Radium of Track Circle	mm
E		mm/min	S	Spindle speed	RPM
F	Feedrate	mm/min	T	Tool diameter	mm
G			U	Cutting direction	0 : cw 1 : ccw
H	Total cutting depth	mm	V	Stock to leave for precision cutting	mm
I	Secone center point X coordinate	mm	W	Width per cutting	mm
J	Secone center point X coordinate	mm	X	First center point X coordinate	mm
K			Y	First center point Y coordinate	mm
L			Z	Height of workpiece surface	mm
M	Cutting Format (Note)				
N					

Note : Cutting Format: 1/Rough cutting; 2/Precision cutting

(setting value/specified cutting format)

4 Indication of Auxiliary Functions (M Code)

The auxiliary functions are utilised to control of ON and OFF of mechanical functions. Format of the command is M codes with 1 or 2 digits of number behind. M codes to be introduced hereafter belongs to conventional auxiliary codes in controllers with fixed functions, they are not designed by specific machine tool factory. This kind of M codes include M00, M01, M02, M30, M98, M99. Their functions are not related to the compilation of LADDER programs.

(1) M00 : Program Pause

When CNC executes M00 Command, the program will be paused in order to let users to proceed dimension check, compensation and correction procedures. Press function key〈CYCLE START〉again to restart programs after the pause.

(2) M01 : Optional Program Pause

The function of M01 resembles that of M00, but M01 is controlled by 〈optional pause〉 key on the panel. When the indicator light is ON, the program will be paused when program executes M01. When the indicator light is OFF, M01 is invalid.

(3) M02 : Program End

When CNC executes this command, the manufacturing will be ended. Press function key〈RESET〉and then〈CYCLE START〉to continue manufacturing.

(4) M30 : Program Ends and Cursor Returns to the Starting Point

Program ends. The function is the same as M02, but the cursor in the program check page will return to the starting point of the program.

(5) M98 : Sub-program Call

Command Format

M98 P__ L__;

Argument Instruction

- P__

  Number of called sub-program (sub-program name excluding 4 numbers after "O"). If there's no input, the system alarm will be triggered【INT 3111 No Called Program Name (has no P address entered)】.

- L__

  Times of repetition.

  Refer to indication 5.3 for difference between macro program and normal sub-program calling.

(6) M99 : Sub-program ends and goes back to Main Procedure

When NC executes M99, it will return to the beginning of the program and run it again. In sub-programs, use M99 to end the program and let it return to the main program.

The table below lists some of the M codes. Excluding M00, M01, M02, M30, M98 and M99, the others are designed by LADDER programs with fixed functions. Such kind of M codes are not specified by the system, and therefore might differ according to machine tool types. Users are recommended to carefully examine command types of adopted machine tool.

M Code	Functions	Remark
M00	Program stop	CNC
M01	Optional stop	CNC
M02	End of program	CNC
M03	Spindle CW	
M04	Spindle CCW	
M05	Spindle stop	
M06	Auto tool change	
M08	Coolant ON	
M09	Coolant OFF	
M19	Spindle Orientation	
M20	Spindle Orientation Tuning	
M28	Rigid tapping Cancellation	
M29	Rigid tapping	
M30	Program rewind	CNC
M98	Calling of subprogram	CNC
M99	End of subprogram	CNC

5 MACRO Program

5.1 Introduction of Macro Program

Traditional NC programs have limited functions, such as being unable to operate and have no if functions. Macro commands provide a higher level method of syntax utilization. Functions such as IF, GOTO, functions, variables, etc. are available and bring users more flexibility.

When adopted in systems, in order to let users to call and execute a series of often-used operations with a

simple command, users can develop Macro programs to fulfill the need.

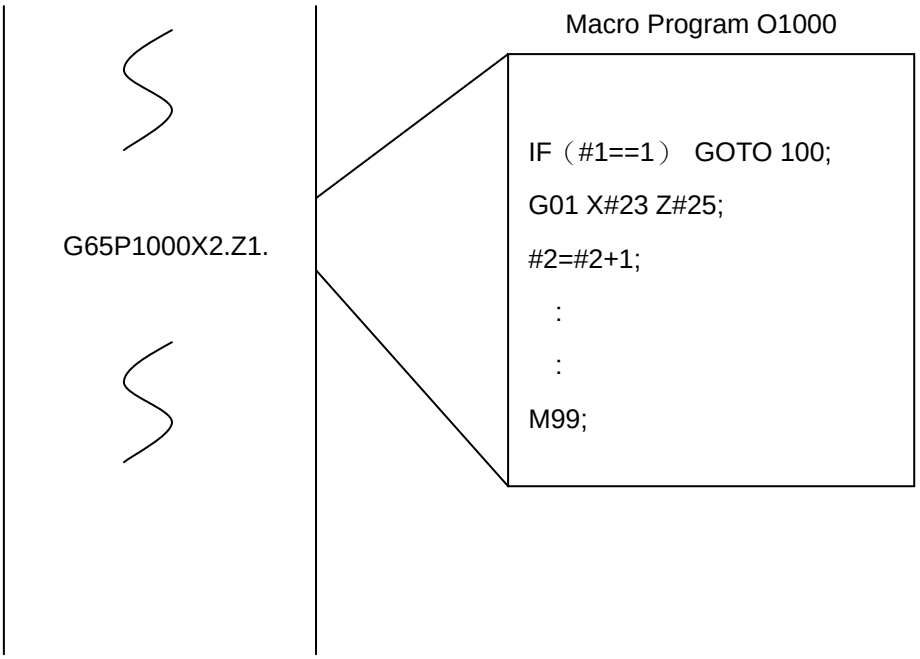

5.2 Macro Program Calling

5.2.1 Macro Program Single Call

Command Format

G65 P__ L__ <arguments…>;

Argument Instruction

Refer to G65 command for more detail.

5.2.2 Macro Program Mode Call

Command Format

G66 P__ L__ < arguments…>;

Argument Instruction

Refer to G66 command for more detail.

5.2.3 Calling Macro Programs by G Codes

Users can use G codes to call macro programs O9010~O9012 by setting parameters of #0166~0168.

Parameter #0166: G code to call macro program O9010.

Parameter #0167: G code to call macro program O9011.

Parameter #0168: G code to call macro program O9012.

When NC encounters aforementioned G codes in the manufacturing programs, it will call and execute the corresponding Macro programs O9010~O9012. If the aforementioned parameters are set to be 0, this function will be disabled. In the Macro programs called by G, M or T codes, G codes set by the aforementioned parameters are considered as ordinary G codes and will be unable to call Macro programs.

When calling macro programs O9010~O9012 by the aforementioned method, users transmit numerical values by arguments as well.

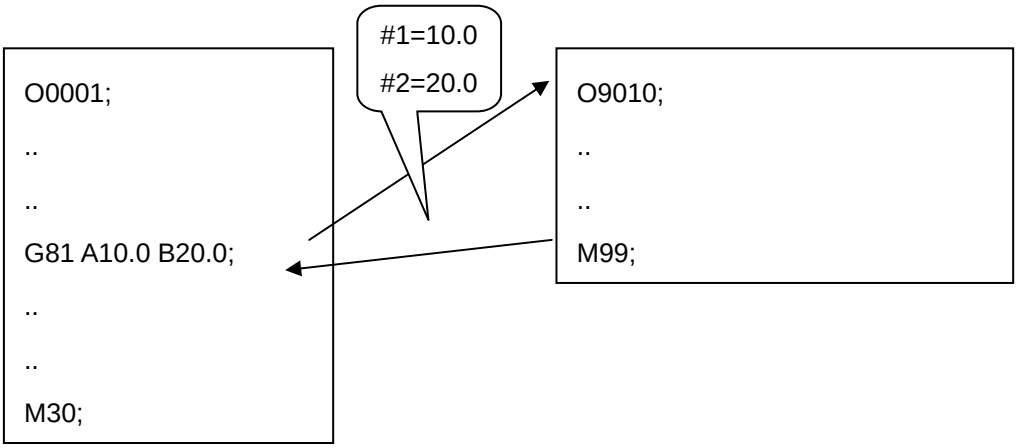

The setting value of parameter #166 is 81

5.2.4 Calling Macro Programs by M Codes

Users can use M-code to call macro programs O9001~O9008 by setting parameters of #0146~0148, 0161~0165

Parameter #0146 : M code to call macro program O9001.

Parameter #0147 : M code to call macro program O9002.

Parameter #0148 : M code to call macro program O9003.

Parameter #0161 : M code to call macro program O9004.

Parameter #0162 : M code to call macro program O9005.

Parameter #0163 : M code to call macro program O9006.

Parameter #0164 : M code to call macro program O9007.

Parameter #0165 : M code to call macro program O9008.

When NC encounters aforementioned M codes in the manufacturing programs, it will call and execute the respective macro programs O9001~O9008. If the aforementioned parameters are set to be 0, the function will be disabled. In the macro programs call by G, M or T codes, the aforementioned M codes are considered as ordinary M codes, and will be unable to call macro programs.

When calling macro programs O9001~O9008 by the aforementioned method, users transmit numerical values by arguments as well.

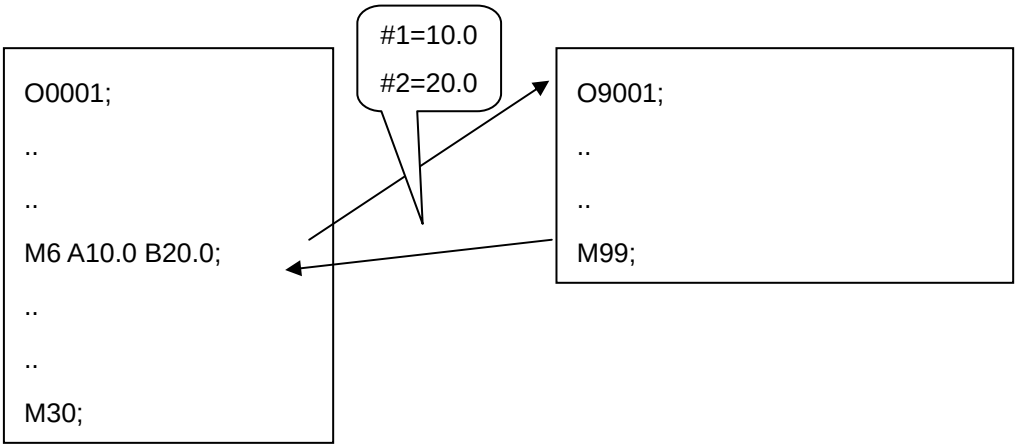

The setting value of paremeter #46 is 6

5.2.5 Calling Macro Programs by T Codes

Users can use T code to call macro program O9020 by setting parameter #0169

Parameter #0169: Whether T code calls macro program O9020

If this parameter is set to be 1, T codes in manufacturing programs will call macro program O9020, and the number following the T code will be set into system variable $149 for latter utilization. In macro programs called by G, M or T codes, the T code will considered as ordinary T code, and will be unable to call macro program O9020.

When calling macro programs O9020 by the aforementioned method, users transmit numerical values by arguments as well.

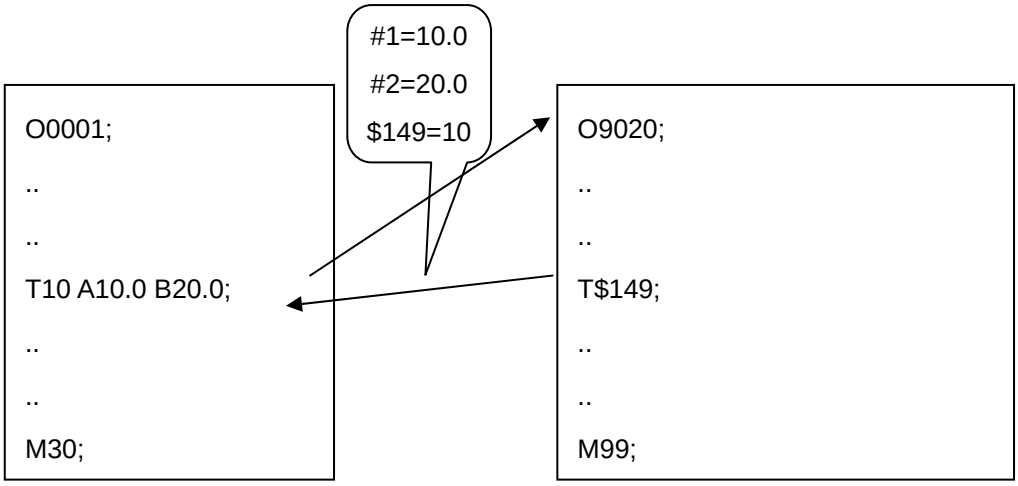

The setting of parameter #169 is 1

5.3 Difference between Macro Program Calling (G65) and General Sub-Program Calling (M98)

1. M98 can not specify the arguments, while G65 can.

2. The level of M98 local variables is fixed, while those of G65 change according to the nest-shaped difference of the depth. (e.g. #1 has the same meaning before and after M98, but will differ while concerning G65.).

3. The maximum calling level of M98 and the combination of G65 and G66 are 8, while the maximum calling level of G65 and G66 is 4.

5.4 MACRO Function Table

Application	Function
.. .. G65 P9000Y20.; .. .. O9000; .. IF （#2==1） GOTO 10; G00Y#1; ..	VARIABLES LOCAL # ,COMMON @ ,SYSTEM $ .ARITHMETIC COMMAND = + – * / ( ) .LOGIC COMMAND AND && ,OR || ,NOT ! .RELATION COMMAND > < >= <= != == ➢ CONTROL COMMAND IF … GOTO .FUNCTON COMMAND SIN ( ) ,COS ( ) ,TAN ( ) , ATAN ( ) , SORT ( ) ,ABS ( ) , ROUND ( ) ,FIX ( ) .GENERAL NC COMMAND G,M,X,Y,Z,… .COMMENT /* …. */

5.5 Variables

5.5.1 Classification of Number Range

- **Local Variables**

#01~#33 : Read/Write

Each level og programs has 33 local variables, and they will be erased once the program ends. However, when the RESET key is pressed, it will return to the main program level, but the content of local variables can be specified by parameter #0141 whether or not to be erased. If the system reboots, variables of each level all will be erased. #00 always will be an empty value.

- **Global Variables**

@001~@999 : Read/Write

All the levels of program utilize these variables. FANUC names them “Common Variables”. @001~@400 will be erased when system starts or the RESET key is pressed, but @401~@999 can be controlled by parameter #0140 to determine whether or not to be the same. #00 always will be an empty value.

- **System Variables**

$001~$199 : Read only

$200~$399 : Read only and preserved

$400~$599 : Read/Write

$600~$799 : Read/Write and preserved

“Preserved” denotes that when the RESET key is pressed or the program restarts or the mode switches, this variable value will maintain the same until it’s overwritten by a new value, but if the system reboots it will be erased.

5.5.2 Classification of Open System Variables

1. MLC I/O Interface Signals

- OP ← MLC MLC C Bit C100~C115

  $200~$215

- OP → MLC MLC S Bit S100~S115

  $600~$615

2. Date and Time Information

- $190 = Axis interruption accumulation count: Whenever the motion card delivers an interruption signal, this value will be added by one.

- $191~$193 = System Date: Read from IPC BIOS

  $191 = Year, yyyy
  $192 = Month, mm
  $193 = Day, dd
  e.g.: 2002/08/15 →$191=2002
  $192=8
  $193=5

- $194~$196 = System Time: Read from IPC BIOS

  $194 = 24hr, hh
  $195 = minute, nn
  $196 = second, ss
  e.g.: 14:25:34 →$194=1
  $195=25
  $196=34

3. Axial Mirror

- $620 : X-axis mirror
- $621 : Y-axis mirror
- $622 : Z-axis mirror
- $623 : C-axis mirror

4. Manufactured Quantity
   - $220 : Number of manufactured workpieces

5. Mode Information
   - $001~$018 : Mode G Code value of group 00~17.
   - $020 : Mode H code
   - $021 : Mode S code
   - $022 : Mode T code
   - $023 : Mode F code
   - $024 : Mode D code
   - $025 : Current manufacturing program sequence number
   - $026 : The value of **** of the current manufacturing program name O****
   - $027 : H code in use
   - $028 : T code in use
   - $029 : D code in use

6. Current Coordinate
   - $030~$035 : Program coordinate x, y, z, c
   - $040~$045 : Program coordinate x, y, z, c of previous single block
   - $046~$048 : Previous single block i, j, k
   - $230~$235 : Machine coordinate x, y, z, c
   - $240~$245 : Absolute coordinate x, y, z, c
   - $250~$255 : Relative coordinate x, y, z, c
   - $260~$265 : Absolute coordinate x, y, z, c when G31 Skips
   - $270~$275 : Machine coordinate x, y, z, c when G31 Skips

7. Coordinate of Workpiece
   - $303 : Offset of external coordinate in X-axis
   - $304~$309 : Offset of G54~G59 coordinate in X-axis
   - $313 : Offset of external coordinate in Y-axis
   - $314~$319 : Offset of G54~G59 coordinate in Y-axis
   - $323 : Offset of external coordinate in Z-axis
   - $324~$329 : Offset of G54~G59 coordinate in Z-axis
   - $333 : Offset of external coordinate in C-axis
   - $334~$339 : Offset of G54~G59 coordinate in C-axis

8. Macro Alarm
   - $599 : Macro alarm serial number specifying

5.5.3 Parameters

Number	Name	Variable Name
#00	NULL	
#01~#33	Local Variables	For each level
@000	NULL	
@001~@400	Global Variables（Common）	Common variables for all program levels Not preserved
@401~@500	Global Variables（Common）	Common variables for all program levels Preserved

Times	Instruction
$001	Mode G code of group 00
$002	Mode G code of group 01
$003	Mode G code of group 02
$004	Mode G code of group 03
$005	Mode G code of group 04
$006	Mode G code of group 05
$007	Mode G code of group 06
$008	Mode G code of group 07
$009	Mode G code of group 08
$010	Mode G code of group 09
$011	Mode G code of group 10
$012	Mode G code of group 11
$013	Mode G code of group 12
$014	Mode G code of group 13
$015	Mode G code of group 14
$016	Mode G code of group 15

Times	Instruction
$017	Mode G code of group 16
$018	Mode G code of group 17
$020	Mode H code
$021	Mode S code
$022	Mode T code
$023	Mode F code
$024	Mode D code
$025	Current Manufacturing Program Sequence Number
$026	Current Manufacturing Program Name The value of **** of the current manufacturing program name O****
$027	H code in use
$028	T code in use
$029	D code in use
$030	Program Coordinate in X-axis
$031	Program Coordinate in Y-axis
$032	Program Coordinate in Z-axis
$033	Program Coordinate in C-axis
$040	Program Coordinate in X-axis of Previous Single Block
$041	Program Coordinate in Y-axis of Previous Single Block
$042	Program Coordinate in Z-axis of Previous Single Block
$043	Program Coordinate in C-axis of Previous Single Block
$046	Previous single block I
$047	Previous single block J
$048	Previous single block K
$190	Accumulated Number of Interruption

Times	Instruction
$191	System Date Year: yyyy
$192	System Date Month: mm
$193	System Date Day: dd
$194	System Date Hour: hh
$195	System Date Minute: nn
$196	System Date Second: ss
$200	MLC→OP C100
$201	MLC→OP C101
$202	MLC→OP C102
$203	MLC→OP C103
$204	MLC→OP C104
$205	MLC→OP C105
$206	MLC→OP C106
$207	MLC→OP C107
$208	MLC→OP C108
$209	MLC→OP C109
$210	MLC→OP C110
$211	MLC→OP C111
$212	MLC→OP C112
$213	MLC→OP C113
$214	MLC→OP C114
$215	MLC→OP C115
$220	Number of Manufactured Workpieces
$230	Machine coordinate in X-axis
$231	Machine coordinate in Y-axis
$232	Machine coordinate in Z-axis
$233	Machine coordinate in C-axis
$240	Absolute coordinate in X-axis

Times	Instruction
$241	Absolute coordinate in Y-axis
$242	Absolute coordinate in Z-axis
$243	Absolute coordinate in C-axis
$250	Relative coordinate in X-axis
$251	Relative coordinate in Y-axis
$252	Relative coordinate in Z-axis
$253	Relative coordinate in C-axis
$260	Absolute coordinate in X-axis when G31 skips
$261	Absolute coordinate in Y-axis when G31 skips
$262	Absolute coordinate in Z-axis when G31 skips
$263	Absolute coordinate in C-axis when G31 skips
$270	Machine coordinate in X-axis when G31 skips
$271	Machine coordinate in Y-axis when G31 skips
$272	Machine coordinate in Z-axis when G31 skips
$273	Machine coordinate in C-axis when G31 skips
$303	Offset of external coordinate in X-axis
$304~$309	Offset of G54~G59 coordinate in X-axis
$313	Offset of external coordinate in Y-axis
$314~$319	Offset of G54~G59 coordinate in Y-axis
$323	Offset of external coordinate in Z-axis
$324~$329	Offset of G54~G59 coordinate in Z-axis
$333	Offset of external coordinate in C-axis
$334~$339	Offset of G54~G59 coordinate in C-axis
$599	Sequence number of MACRO alarm issuing

Times	Instruction
$600	OP→MLC S100
$601	OP→MLC S101
$602	OP→MLC S102
$603	OP→MLC S103
$604	OP→MLC S104
$605	OP→MLC S105
$606	OP→MLC S106
$607	OP→MLC S107
$608	OP→MLC S108
$609	OP→MLC S109
$610	OP→MLC S110
$611	OP→MLC S111
$612	OP→MLC S112
$613	OP→MLC S113
$614	OP→MLC S114
$615	OP→MLC S115
$620	X-axis mirror
$621	Y-axis mirror
$622	Z-axis mirror
$623	C-axis mirror
$630	Inform whether currently doing tapping procedure
$631	Setup of ATC jump steps
$1000 ~$1255	Can read MLC R0~R255
$2000 ~$2015	Can write R240 ~ R255

5.5.4 Tool Compensation

Tool compensation can be regulated by G10. In macro programs. Users can use GET functions to read tool compensation values. Please notice that it's the only difference comparing FANUC's. Refer to the indication of 5.10 for the usage of GET functions.

5.5.5 Expression of Variable

1：

#i	# i Local Variable
@i	# I Global Variable
$i	# i System Variable

2：

#（<formula>）
@（<formula>）
$（<formula>）

Program Sample

#（#10） ----------（Correct）

#（#10-1）----------（Correct）

#（#6/2） ----------（Correct）

#（#3-FIX（#2）） ----------（Correct）

##2----------（Incorrect）

5.5.6 Application of Variables

<address> #i or <address> #i
<address> @i or <address> @i
<address> $i or <address> $i

Program Sample

X#33;---------- (If #33 is 1.2, it is equivalent to X1.2;)

Z-#33; ---------- (If #33 is 2.1, it is equivalent to Z-2.1;)

G#33;---------- (If #33 is 3, it is equivalent to G3;)

5.5.7 Instruction of VACANT Value

1. All local variables of the specific level will be reset to VACANT when MACRO CALL.

2. VACANT values will be ignored and not be interpreted when interpreting CNC commands.

   For example :

   When #1=10, #2=VACANT

   G00X#1Y#2; equivalent to G00X10;

   Hence, it is good for the compilation of MACRO content.

3. Besides assign (=), the same as 0 when operating

   For example :

   For example:

   If #1=VACANT

   #2=#1, then #2=VACANT

   If #2=#1+#1, then #2=0

4. Besides == !=, the same as 0 when using the conditioned statements

   For example :

   若 #1=VACANT

   If #1=VACANT

   #1==#0 true

   #1==0 false

   #1 >= 0 true

5.6 Mathematic Operation Command

（1）Substitution, =

#i = #j

（2）ADDITION, +

#i = #j + #k

（3）SUBTRATION, -

#i = #j - #k

（4）MULTIPLICATION, *

#i = #j * #k

（5）QUOTIENT, /

#i = #j / #k

（6）PARENRHESIS, （ ）

#i = #j * （ #k + #l ）

5.7 Logic Operation Command

（1）AND logic operation, &&

#i = #j && #k

0 for false and non-0 for true in logic operation

（2）OR logic operation, | |

#i = #j | | #k

（3）NOT logic operation, !

#i = ! #j

5.8 Compare Command

（1）Greater Than （GT）， >

#i = #j > #k，If #j is greater than #k, then the statement is true, #i=1.

（2）Less Than （LT），<

#i = #j < #k，If #j is less than #k then the statement is true, #i=1.

（3）Greater Than or Equal to （GE）， >=

#i = #j >= #k，If #j is greater than or equal to #k, then the statement is true, #i=1.

（4）Less Than or Equal to （LE），<=

#i = #j <= #k，If #j is less than #k, then the statement is true, #i=1.

（5）Equal，==

#i = #j == #k，If #j is equal to #k, then the statement is true, #i=1.

（6）Not Equal，!=

#i = #j != #k，If #j is not equal to #k, then the statement is true, #i=1.

5.9 Flow Control Command（IF～GOTO）

IF~GOTO statement can be used to control the flow of the program.

（1）Conditioned Jump

IF （ <Conditional express> ） GOTO n

Instruction:

IF <Conditional express> condition is true, then jump to the block numbered “n”, else continue the next block.

For example:

IF （ （#1+#2） > 3 ） GOTO 10；

:

:

N10 G01 X#3；

（2）Unconditioned Jump

GOTO n

Instruction :

Jump to the block numbered “n” directly.

5.10 Flow Control Command (WHILE～DO)

Label conditioned statement after WHILE, when the labeled condition is fulfilled, programs execute from DO to END. It the labeled condition is not fulfilled, programs execute content after END.

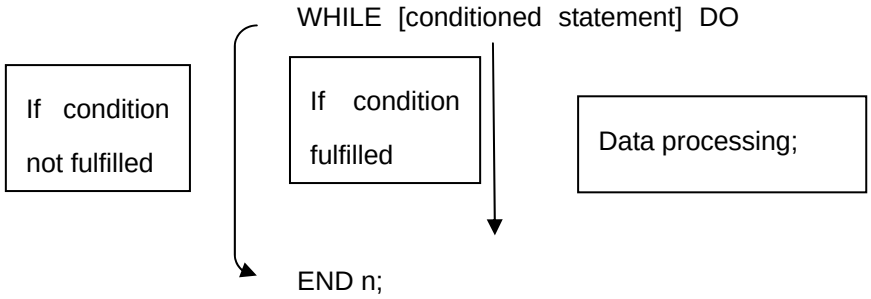

Sequential numbers after DO and END are identification symbols of execution range. Use 1, 2, 3 as the identification number. If numbers other than 1, 2, 3 are used, system alarm #3170 will be triggered in the Don statement as: 1≤ n ≤3 unsatisfied.

- WHILE statement syntax:

  Identification numbers (1~3) can be used for times if needed.

```
WHILE [….] DO 1;
        Data processing;
END 1;
….
….
….
WHILE [….] DO 1;
        Data processing;
END 1;
….
….
```

- Range of Docan not be overlapped

```
WHILE [….] DO 1;
        Data processing;
….
WHILE [….] DO 2;
….
….
END 1;
        Data processing;
END 2;
….
….
```

The aforementioned command usage will trigger system alarg #3171: DO-END not 1:1 corresponded.

- DO cycle can be embeded for up to 3 layers.

```
WHILE [….] DO 1;
…. .
…. .
    WHILE [….] DO 2;
        …. .
        …. .
            WHILE [….] DO 3;
                Data processing;
            END 3;
            …. .
            …. .
    END 2;
…. .
…. .
END 1;
….
….
```

- Controlling can be transferred to the outside of the loop.

```
WHILE [….] DO 1;
…. .
…. .
IF (….) GOTO n;
    …. .
    …. .
END 1;

Nn
```

- It can't be transferred from the outside into the loop.

```
IF (….) GOTO n;
….. .
….. .
WHILE [….] DO 1;
……
….. .
Nn …;

END 1;
```

5.11 Function

（1）SIN Function

#i=SIN（#J）　　（unit : degree）

（2）COS Function

#i=COS（#j）　　（unit : degree）

（3）TAN function

#i=TAN（#j）　　（unit : degree）

（4）ATAN function

#i=ATAN（#j）　　（unit : degree）

（5）SQRT function

#i=SQRT（#j）　　（Root Mean Square value）

（6）ABS function

#i=ABS（#j）　　（Absolute value）

（7）ROUND function

#i=ROUND（#j）　　（Rounded off）

（8）FIX function

#i=FIX（#j）　　（unconditioned truncation）

（9）GET function

#i=GET（#k,#j）

#j : The number of tool compensation（1~99）

#k : 1 : Tool length compensation

2 : Tool radius offset

5.12 Comment

The inputs between "/*" and "*/" will be ignored.

Example : :

```
/* test1 */;

G00 X10. /* test 2 */;

/* test3 */ G01 Y20.;

G01 X10. Y20.; /* test
```